MINI BLOCKS COFFEE MACHINE

ADULT ASSISTANCE IS RECOMMENDED.
PRODUCT MAY SLIGHTLY FROM IMAGE SHOWN.

⚠ WARNING: CHOKING HAZARD - SMALL PARTS. NOT FOR CHILDREN UNDER 3 YEARS.

8+ YEARS

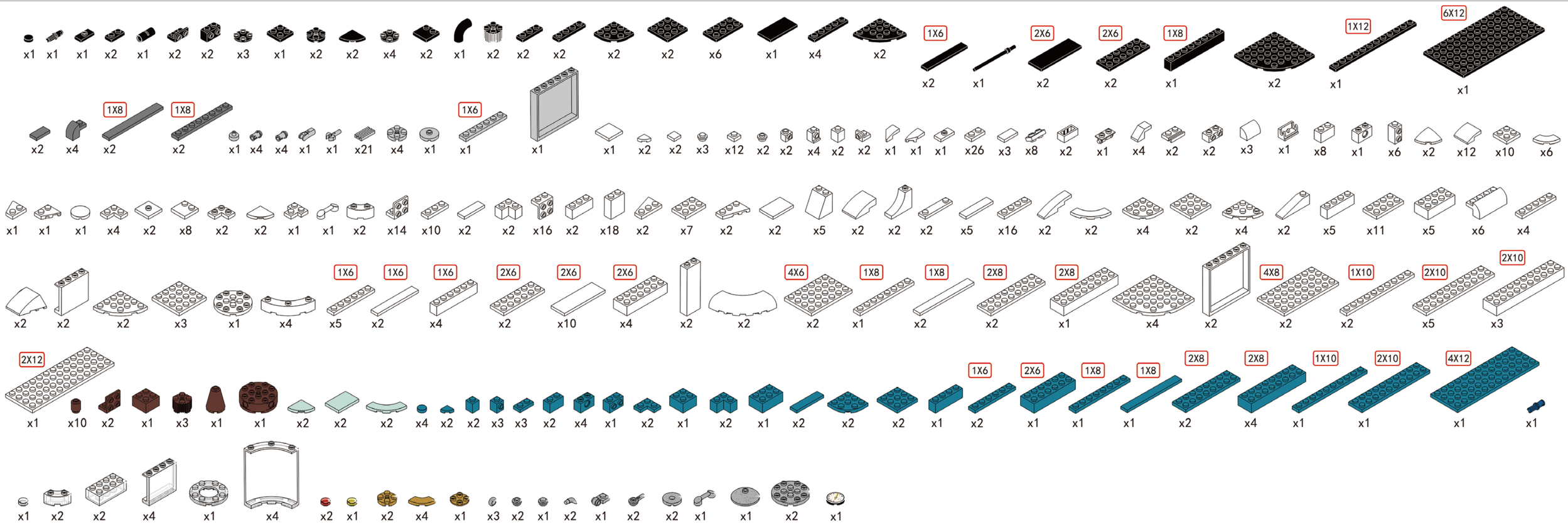

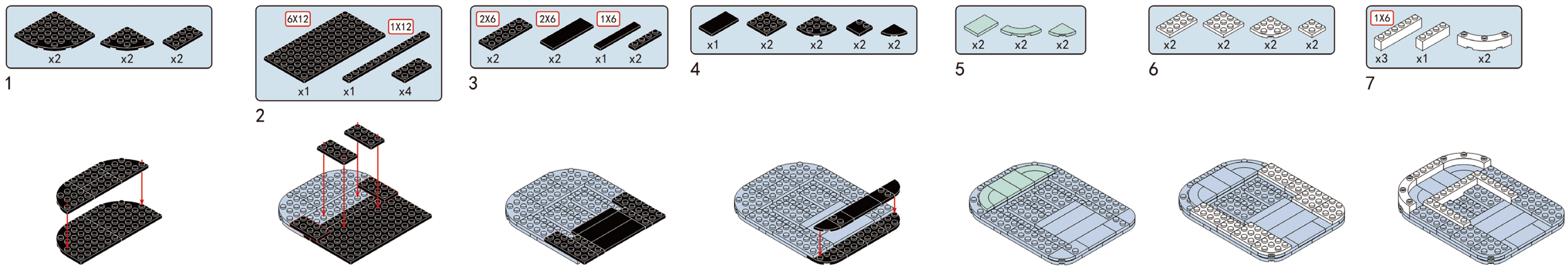

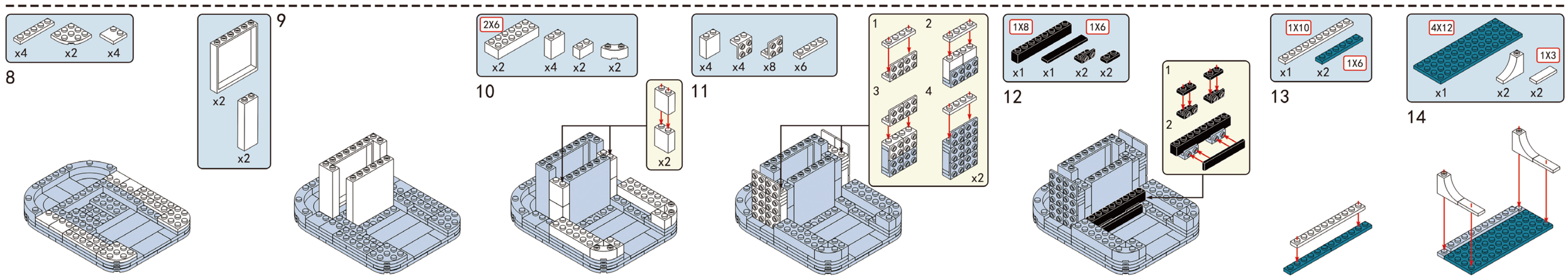

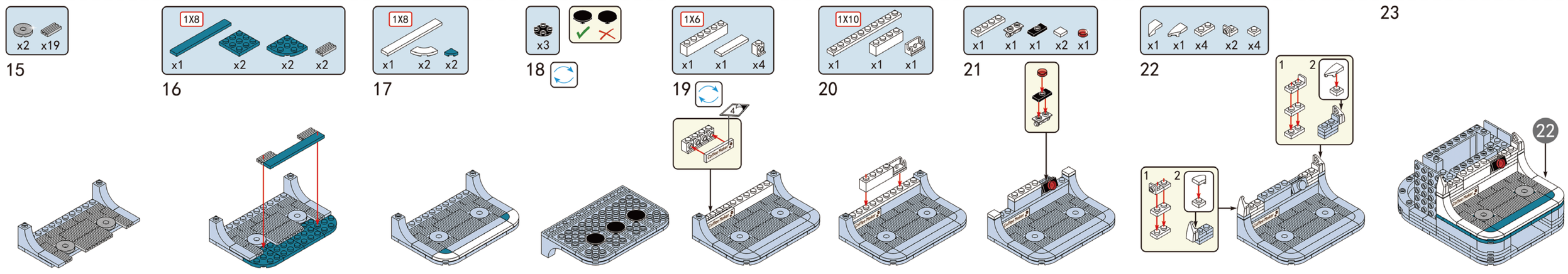

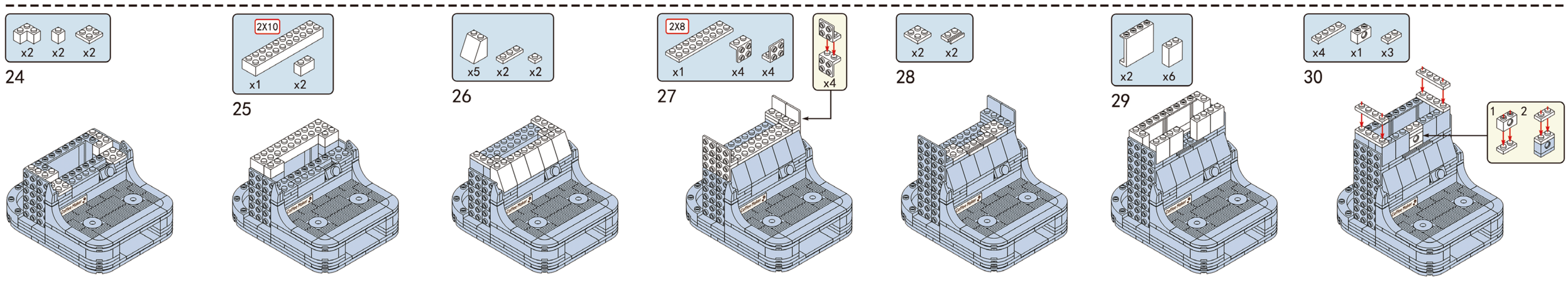

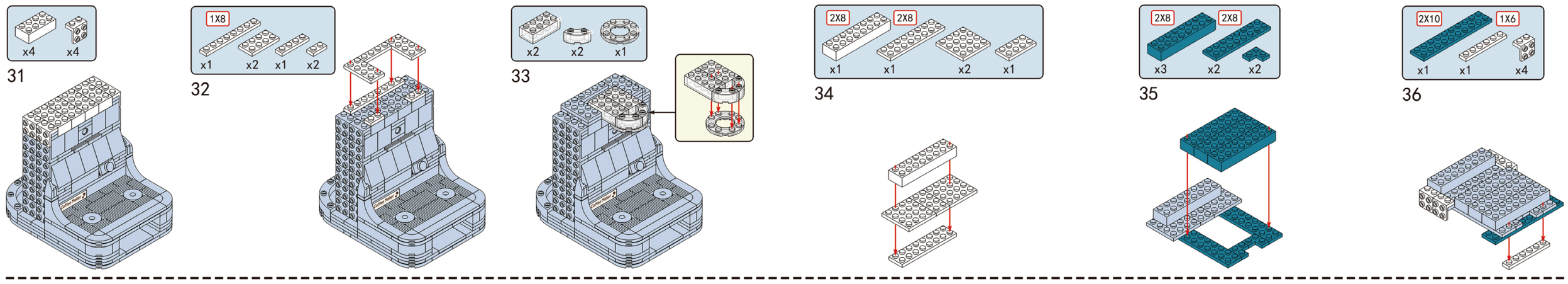

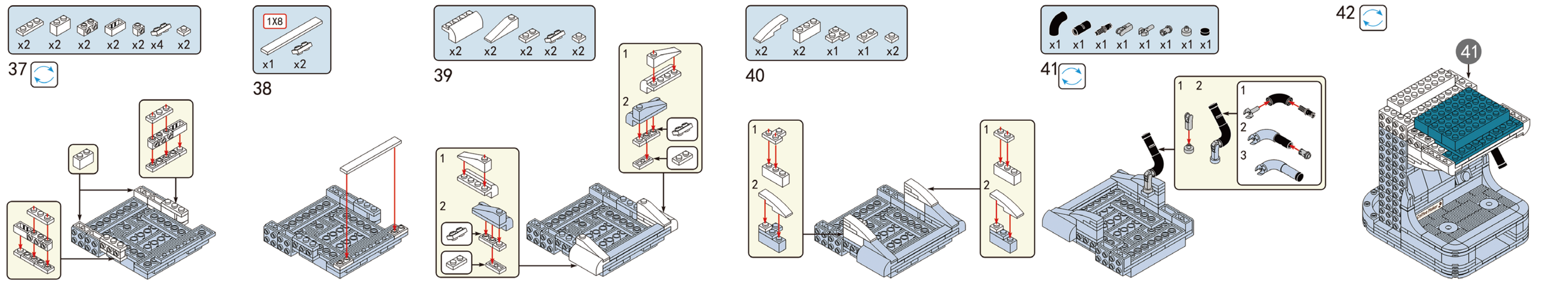

43
4X8 x1
4X6 x1
2X6 x4 x1 x1 x2
44
x1 x1 x1 x1 x1 x1
45
4X8 x1
4X6 x1
2X6 x4 x1 x1 x2
46
x1 x1 x1 x1 x1 x1
47
x4 x2
x2
48
x1 x1 x1
49
1X6 x2 x2 x2 x2 x1
50
x2 x2 x2
x4
x4
51
x2
52
x2 x2
53
2X8 x1 x1 x2
54
2X6 x2 x1 x2
55
2X12 x1 x2
56
x1 x2 x1 x1 x1
57
x2 x1 x2 x1 x1 x1 x1
58
2X6 x1 x4 x1
59
x1 x1 x1 x1 x1 x1 x1
60
x1 x1 x1 x1 x1
61
1X10 x1 x1
1X8 x1 x1 x1
62
x2 x6 x2 x2 x2 x4
x2
63
x1 x2 x2
64
2X6 x2 x2 x2
1X6
65
2X10 x2 x2 x2 x2
66
2X10 x2 x2
67
2X10 x2 x1 x2
68
x2 x4 x3
69
2X6 x2 x2 x2
1X6
70
x2 x4 x2
71
2X10 x1 x1
72
x12 x2
73
1X8 x2 x2 x4 x2
x2
74
x1 x1 x4
75
x1 x1
76
x2 x4
77
x1 x1
78
x1 x4 x1
79
x2 x1 x1 x1 x2
80
x1 x1 x3 x1
81
80
82
1X6 x1 x1 x2 x2 x1 x10
83
x4 x4
x4
84
x2 x2 x1
85
x1 x2 x1
86
x1 x1 x1 x1 x1 x2
87
x1 x1 x1 x1
88
x1 x1 x1 x1 x1 x1 x2
89
x1 x1 x1 x1 x1 x1 x2
90
91