ICE MAKER

Instruction Manual

Model No.: AICEM15

Rev 01

To ensure the proper operation of this device, please read this instruction manual carefully before use and save it for future reference.

General Information and Safety Instructions

Read all instructions thoroughly before first use, even if you are familiar with this type of product. The safety precautions mentioned in this manual reduce the risk of burns, fire, electric shock and injury when correctly followed. Keep this manual in a safe place for future reference, along with the purchase receipt and packaging. If applicable, pass these instructions onto the next owner of this appliance.

⚠ **WARNING** - This signal term indicates a moderate risk, which, if not avoided, may result in death or severe injury.
⚠ **CAUTION** - This signal term indicates a low risk, which, if not avoided, may result in minor or moderate injury.
NOTE - This signal term warns you of potential damage.

Always follow basic safety instructions and accident prevention measures when using an electrical appliance, including the following:

• **Indoor domestic use only**: This appliance is intended for indoor domestic use only. Do not use it outdoors, where aerosol (spray) products are being used or where oxygen is being administered. Any commercial or similar use will be classed as a case of misuse and will invalidate your warranty.

• **Intended purpose:** Do not use this appliance for anything other than its intended purpose, and only use it as described in this manual. Misuse may result in injury.

• **Accessories:** Only use accessories recommended by the manufacturer.

• Always turn the power off at the power outlet socket before you inserting or remove the supply cord plug. Remove by grasping the plug – do not pull on the cord.

• Ensure that the wall power outlet socket is easily accessible, so that you can remove the mains plug quickly if necessary.

• Always allow the appliance to cool down completely before storing away or cleaning. Do not wind the power cord around the appliance.

• Always use the appliance from a power outlet socket that match the voltage (A.C. only) marked on the rating plate of the appliance.

• Do not place this appliance immediately below or in front of a mains power outlet socket as this may pose a fire hazard.

• Never pull or carry the appliance by its power cord. Do not allow the power cord to touch hot surfaces or sharp edges.

• Do not position the power cord where it may be pulled by children or tripped over. Do not run the power cord under carpeting. Do not cover the power cord with throw rugs, runners or the like.

• ⚠ **CAUTION:** Do not use this appliance near an open window as an ingress of rain or moisture may cause an electric shock.

• Do not use your appliance with an extension cord unless this cord has been checked and tested by a qualified electrical service person.

• This appliance is not intended for use by persons (including children) with reduced

physical, sensory or mental capabilities, or lack of experience and knowledge, unless they have been given supervision or instructions concerning the use of the appliance by a person responsible for their safety. Children should be supervised to ensure that they do not play with the appliance.
• Do not allow children to play with the appliance or the packing materials. Danger of suffocation.
• To protect against risk of electric shock, do not immerse the cord, plug or unit in water or any other liquid.
• Unwind the power cable completely prior to use. Ensure that the power cable is not damaged by sharp edges.
• Do not place the appliance on or near flammable or hot objects.
• Do not allow the power cord of the appliance to touch any hot surfaces.
• ⚠ **WARNING** In order to avoid overheating, do not cover the appliance.
• ⚠ **CAUTION:** Do not use this appliance in conjunction with a programmer, timer or any other device that switches it on automatically, as this poses a fire risk.
• Some appliances are "sealed" using tamperproof screws to avoid tampering/ maintenance by unskilled or unqualified persons and for safety reasons.
• Do not operate any electrical appliance if the power cord is damaged or after the appliance has been dropped or damaged in any manner. If damage is suspected, contact Kmart/Target customer service.
• Do not operate the appliance with wet hands.
• Do not carry out any modifications to the appliance or its mains cable. Any repairs to the appliance must be carried out by qualified electrical person only or the appliance must be disposed.
• Do not use chemical, steel wool or abrasive cleaners to clean the appliance.
• ⚠ **WARNING** The appliance is to be installed so that switches and other controls cannot be touched by a person in the bath or shower.
• This appliance is intended to be used in household and similar applications such as:
- staff kitchen areas in shops, offices and other working environments;
- farmhouses;
- by clients in hotels, motels and other residential type environments;
- bed and breakfast type environments.
• If the supply cord is damaged, it must be replaced by qualified electrical person only for electrical safety..
• Do not use this appliance in the immediate surroundings of a bath, a shower or a swimming pool.
• Do not use this appliance if it has been dropped.
• Do not use if there are visible signs of damage to the appliance.
• Use this appliance on a flat, stable and heat resistant surface.

- This appliance can be used by children aged from 8 years and above and persons with reduced physical, sensory or mental capabilities or lack of experience and knowledge if they have been given supervision or instructions concerning use of the appliance in a safe way and understand the hazards involved. Children shall not play with the appliance. Cleaning and user maintenance shall not be made by children without supervision.
- **WARNING!** Keep ventilation openings, in the appliance enclosure or in the built-in structure, clear of obstruction.
- **WARNING!** Do not damage the refrigerant circuit.
- **WARNING!** When positioning the appliance, ensure the supply cord is not trapped or damaged.

- **WARNING!** Do not locate multiple portable socket-outlets or portable power supplies at the rear of the appliance.
- **WARNING!** Fill with drinkable water only.
- **CAUTION!** Remove all adhesive tape inside the unit before operation.
- Do not store explosive substances such as aerosol cans with a flammable propellant in this appliance.
- To avoid water contamination, please follow below instructions:
  – Clean the water tank if the ice maker is not used for more than 48 hours;
  – If the ice maker is left empty for long periods, switch off, defrost, clean, dry, and leave the lid open to prevent mould developing within the appliance.

Warning: Risk of fire/flammable materials used. Please refer to local regulations regarding the disposal of the flammable gas appliances.

- The climate class enables you to see the ambient temperature range in which the appliance will be able to maintain the necessary storage temperatures:

Climate Class	Operation Temperature
SN	10 - 32 Degrees Celsius
N	16 - 32 Degrees Celsius
ST	16 - 38 Degrees Celsius
T	16 - 43 Degrees Celsius

WARNING:
• To reduce the risk of electric shock, do not immerse or expose the product, flexible cord or plug to rain, moisture or any liquid.
• Do not use the product near baths, basins or other vessels containing water or other liquids, or when standing in or on damp or wet surfaces.
• If the appliance is accidentally dropped into water, turn off the power at the power outlet and remove the supply cord plug immediately.
DO NOT REACH INTO THE WATER TO RETRIEVE IT UNTIL IT HAS BEEN DISCONNECTED FROM THE MAINS POWER OUTLET.
• It is important to note that the appliance will have to be inspected by a qualified electrical person before using it again.

SAVE THESE INSTRUCTIONS

Parts Guide

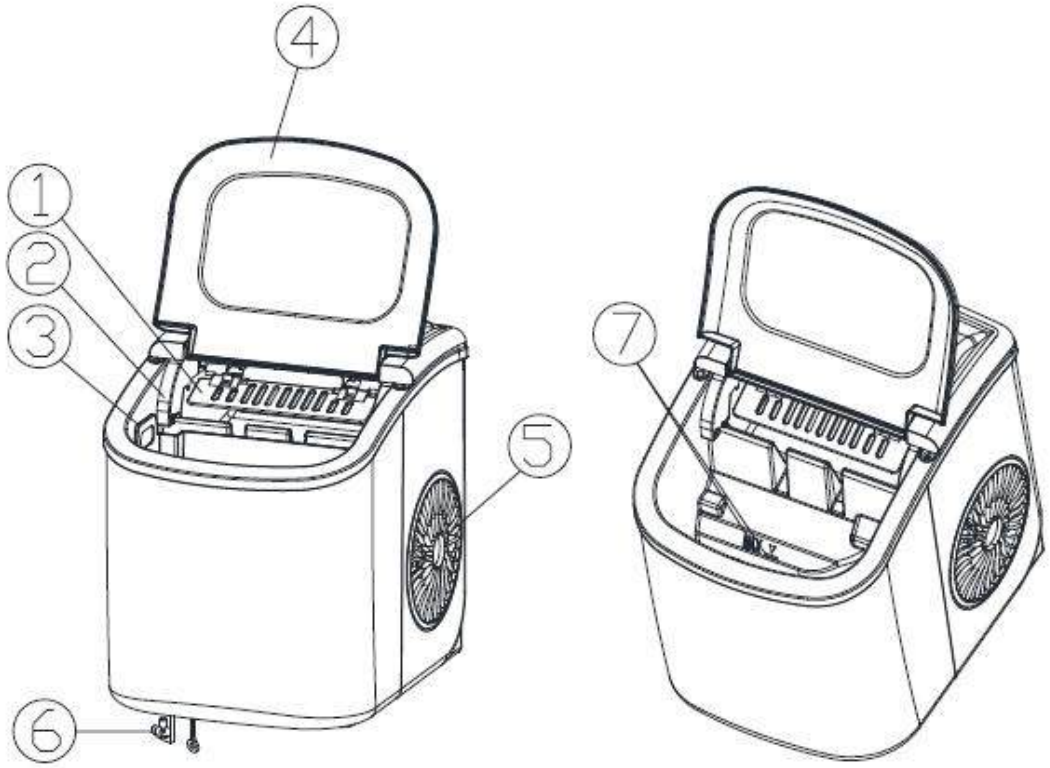

1. Ice pusher
2. Ice full sensor
3. Ice basket
4. Lid with viewing window
5. Air outlet
6. Water drain cap (bottom of the Ice Maker)
7. MAX Water Level (Remove the Ice basket to see the MAXIMUM Mark)

Control Panel

A – Ice Size Selector Indicator – S (Small) L (Large)
B – Power Indicator
C – Ice Full Indicator
D – Water Shortage Indicator
E – ON/OFF Power Button
F – SELECT Button

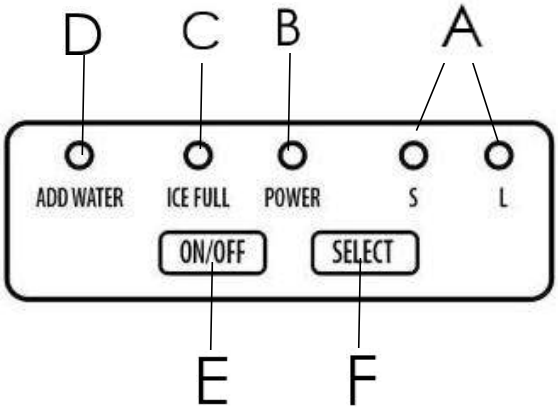

Instructions

USING YOUR ICE MAKER FOR THE FIRST TIME

Carefully unpack the Ice Maker and remove any packaging. This includes any packaging tape or protective wrap that has been used. Check to ensure that all components are included. If components are missing or damaged, please contact Kmart/Target customer service.

It is recommended to clean the Ice Maker before use to remove any manufacturing residues.

- Remove the ice basket and scoop.
- Clean the interior of the ice maker with warm soapy water and a soft cloth.
- Never immerse the product in water or other liquids.
- Do not use any aggressive cleaners, brushes with metal or nylon bristles, sharp or metallic cleaning utensils such as knives, hard scrapers and the like as they may damage the Ice Maker.
- Over a sink or with a large container to collect the water, unplug the white drain cap on the bottom of the Ice Maker to allow any remaining water to drain from the tank.
- Once the water is drained, replace the drain cap into the Ice Maker ensuring that it is firmly in place.
- Dry the interior and exterior of the Ice Maker with a clean, soft cloth.
- Wash the ice basket and scoop in warm, soapy water. Ensure to wipe clean and dry thoroughly before returning them to the Ice Maker.
- **NOTE**: Do not clean the evaporator.

Place the unit on a level, dry and heat resistant surface ready to use. Ensure that there is a 20cm clearing around the ice maker.

IMPORTANT! Before using the Ice Maker, ensure to leave it standing for 1 hour to allow the refrigerant fluid to settle before connecting the Ice Maker to the power outlet.

The Ice Maker must be positioned so that the power plug is accessible.

Ensure that you read all instructions carefully and save it for future reference.

WARNING! Only use drinking water in the Ice Maker.

INSTRUCTIONS FOR USE

- Open the lid and remove the ice basket and scoop.
- Ensure that the drain cap is firmly in place on the base of the unit.
- Pour cold water into the tank.
  WARNING! Water must be below the MAX marking.
- Return the ice basket to the Ice Maker.
- Connect the power cord to a mains power outlet.

- The POWER button illuminator will flash to show that it is in standby mode.
- Press the ON/OFF button on the control panel to turn on the Ice Maker.
- Choose the Ice size by pressing the "SELECT" button to toggle between S (Small) and L (Large) to select the ice size.
- The ice making cycle takes approximately 6-12 minutes depending on the ice size selected (shorter for small ice, longer for large ice) and the room temperature. The recommended room temperature when using the Ice Maker is 10°C - 38°C.
- If there isn't enough water in the tank, the Ice Maker will stop and the "ADD WATER" indicator will illuminate. Press the ON/OFF button to turn off the Ice Maker. Fill the tank with cold water to the MAX marking (Ensure that the water does not exceed the MAX marking). Wait 3 minutes before starting the Ice Maker. Press the ON/OFF button again to turn the Ice Maker back on.
- When you have made your required amount of ice, remove the ice from the ice basket. The ICE FULL Indicator will also illuminate when the basket is full.
  WARNING: Do not use the Ice Maker in direct sunlight. As this will affect the performance of the Ice Maker.
- It is recommended to change the water every 24-48 hours. Do not attempt to make ice with water that has been left in the tank.
- When you have finished using the Ice Maker, move the ice maker so that it is over a sink or place a large container to catch the water under the drain cap and remove the drain cap to allow the water to be released. Ensure to replace the drain cap firmly once the water has drained.
- To stop the Ice Maker and turn it off during the ice making process, press and hold the ON/OFF button, the product will turn off and the water will drain from the top of the product into the water tank. Allow any ice that has formed to drop away from the Ice spindles.

Automatic Self-cleaning

The self-cleaning function takes approximately 30 minutes to complete.

- Remove the ice basket from the Ice Maker.
- Fill the water tank with water to the MAX level marking of the water tank (Ensure to not fill the water past the MAX marking)
- Connect the Ice Maker to a power outlet and turn the power on at the wall. The Ice Maker will enter standby mode and the ON/OFF button will illuminate intermittently/flash.
- Press and hold the ON/OFF button on the control panel to enter the self-cleaning mode.
- The S and L lights will flash in turn during the cleaning process.
- After the cleaning process is complete, the Ice Maker will return to the standby mode and the POWER button will illuminate intermittently.
- When you have finished the self-cleaning process, move the ice maker so that it is over a sink or place a large container to catch the water under the drain cap. Remove the drain cap to allow the water to be released. Ensure to replace the drain cap firmly once the water has drained.

NOTE: Return the drain cap to the bottom of the Ice Maker and ensure that it is firmly in place,

Troubleshooting

PROBLEM	POSSIBLE CAUSE	SOLUTION
"ADD WATER" Indicator is illuminated	Water tank does not have enough water.	Stop the Ice Maker by pressing the On/Off button. Pour water into the tank, ensuring to not exceed the MAX marking. Press the On/Off button again to restart the Ice Maker.
"ICE FULL" Indicator is illuminated	The Ice basket is full.	Remove the ice from the Ice basket.
Ice is sticking together	The ice making cycle is too long.	Stop the Ice Maker. Select the small size ice and restart the Ice Maker
	Water temperature is too low.	Drain and replace the water. The recommended temperature of the water is 8°C - 32°C
No ice is being formed	Room temperature or the water temperature of the inner tank is too high.	The room temperature should be 10-43°C, water temperature should be 8-32°C
	Refrigerant is leaking.	Contact After Sales Support
	Cooling system is blocked.	Contact After Sales Support

Cleaning and Maintenance

It is recommended to clean the Ice Maker and replace the water every 24-48 hours. Ensure the ice maker is turned off, unplugged and at room temperature before cleaning.

- Remove the ice basket.
- Clean the interior of the ice maker with warm soapy water and a soft cloth.
- Never immerse the product in water or other liquids.
- Do not use any aggressive cleaners, brushes with metal or nylon bristles, sharp or metallic cleaning utensils such as knives, hard scrapers and the like as they may damage the Ice Maker.
- Over a sink, unplug the drain cap on the bottom of the Ice Maker to allow any remaining water to drain from the tank.
- Once the water is drained, replace the drain cap into the Ice Maker ensuring that it is firmly in place.
- Dry the interior and exterior of the Ice Maker with a clean, soft cloth.
- Wash the ice basket and scoop in warm, soapy water. Ensure to wipe clean and dry thoroughly before returning them to the Ice Maker.
- **NOTE**: Do not clean the evaporator.

STORAGE

- If the Ice Maker is not going to be used for an extended period of time, ensure that the water reservoir is empty, and all components are dry before storing. **CAUTION**! Mould may develop if all parts are not dry.
- Store in a cool and dry place away from direct sunlight and out of reach of children.

Other Useful Information

Correct disposal of this product

This marking indicates that this product should not be disposed of with normal household waste. To prevent possible harm to the environment and human health, recycle it responsibly. If unsure, contact the local council waste management service to find out recycling facilities available for your area.

Technical Specifications

Model Number	AICEM15
Power Supply	220-240V~ 50Hz
Electrical Safety Class	I
Climate Class	SN, N, ST, T
Ice-making Rating	0.8A
Ice-harvest Rating	1.0A
Refrigerant	R600a/17g
Vesicant	C_5H_{10}

12 MONTH WARRANTY

Thank you for your purchase.

Your new product is warrantied to be free from defects in materials and workmanship for the period stated above, from the date of purchase, provided that the product is used in accordance with accompanying recommendations or instructions where provided. This warranty is in addition to your rights under the Australian Consumer Law.
For New Zealand customers, this warranty is in addition to statutory rights observed under New Zealand legislation.

We will provide you with your choice of a refund, repair (where possible) or exchange (availability dependent) for this product if it becomes defective within the warranty period. The business will bear the reasonable expense of claiming the warranty.
The warranty will no longer apply where the defect is a result of alteration, accident, misuse, abuse, or neglect.

Please retain your receipt as proof of purchase and contact our Customer Service centre as listed below, for the entity you purchased this product from, for any difficulties with your product. Warranty claims and claims for expenses incurred in returning this product can be addressed with the respective Customer Service Centre.

Our goods come with guarantees that cannot be excluded under the Australian Consumer Law. You are entitled to a replacement or refund for a major failure and compensation for any other reasonably foreseeable loss or damage. You are also entitled to have the goods repaired or replaced if the goods fail to be of acceptable quality and the failure does not amount to a major failure.

Contact for Kmart purchases	**Contact for Target purchases**
Kmart Australia Ltd. C/-Customer Service Centre 690 Springvale Road, Mulgrave VIC 3170 Customer Service: 1800 124 125 (Australia) or 0800 945 995 (New Zealand) or via Customer Help at kmart.com.au	Target Australia Pty Ltd C/- Customer Service Centre 2 Kendall Street, Williams Landing, VIC, 3027 Customer Service: 1300 753 567 or via Customer Help at target.com.au/help/contact-us