20CM

14CM

anko

miniblocks

Guitar with Speaker Instructions

6+ years

Lifestyle Series

539 PIECES

Difficulty Level



K: 43-689-200 | T: 72-437-971

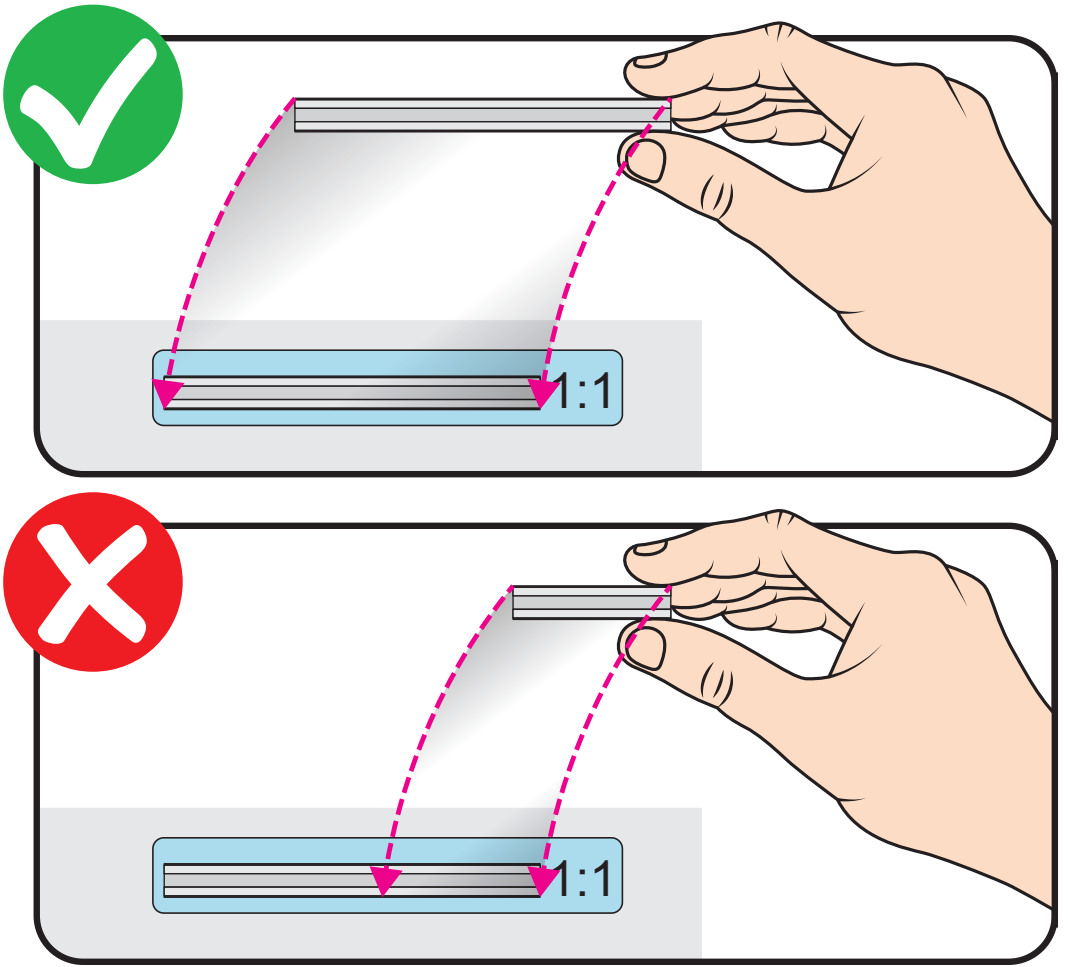
1:1
1:1



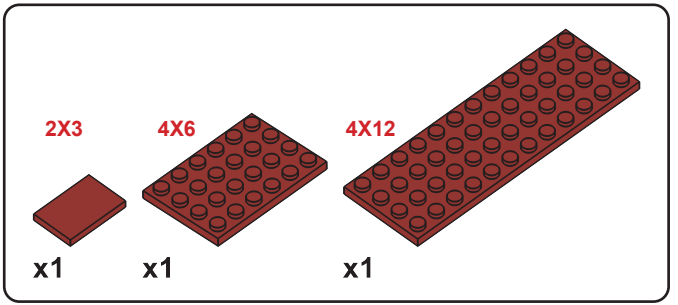

1

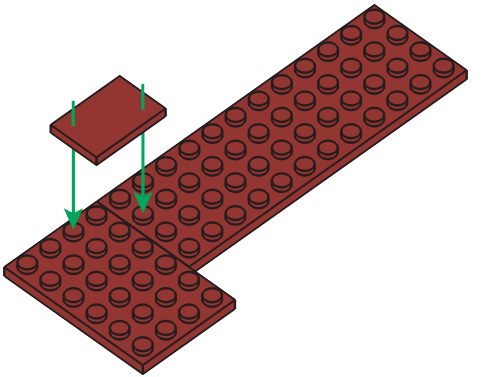

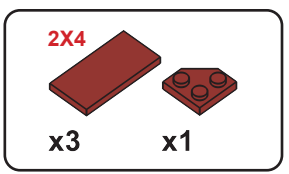

2

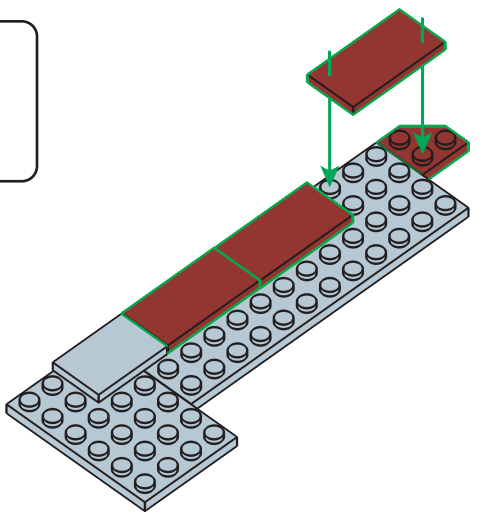

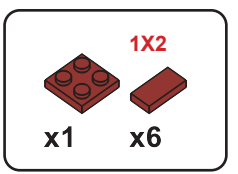

3

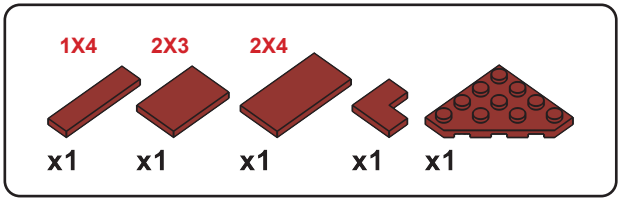

4

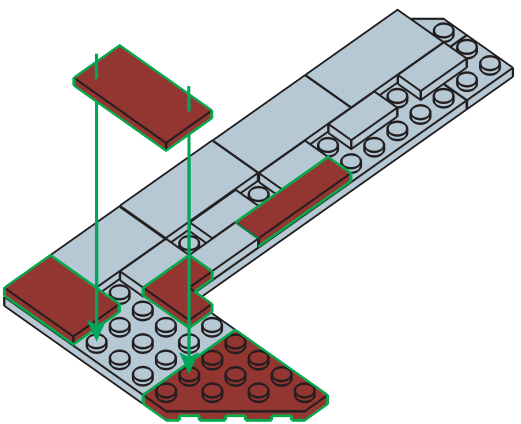

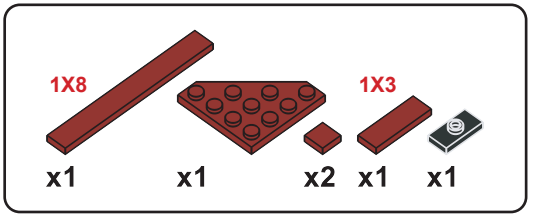

5

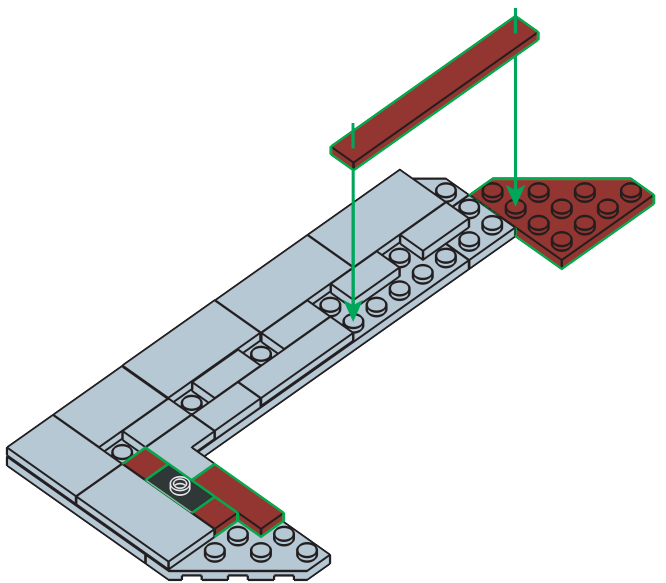

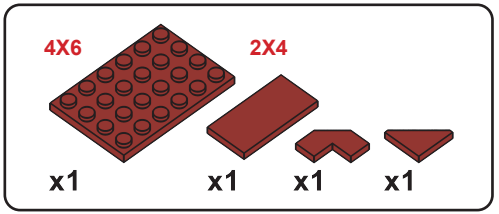

6

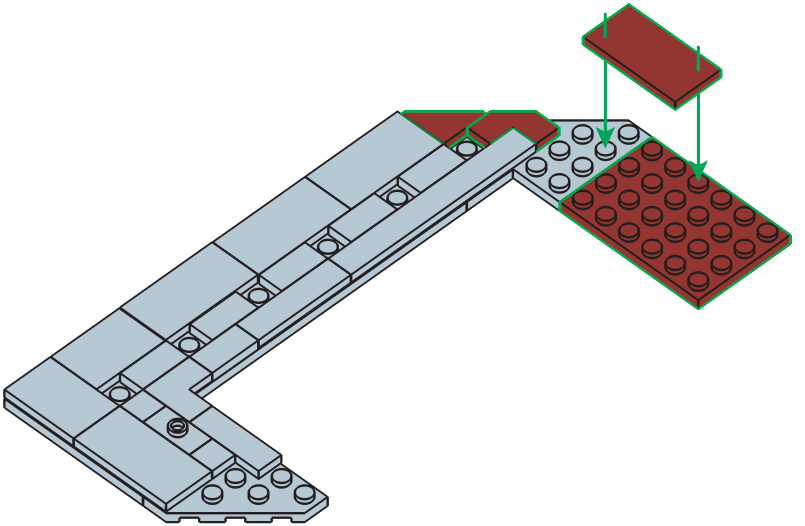

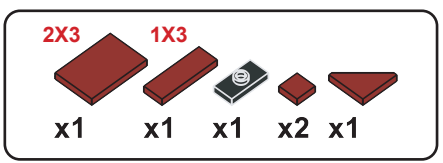

7

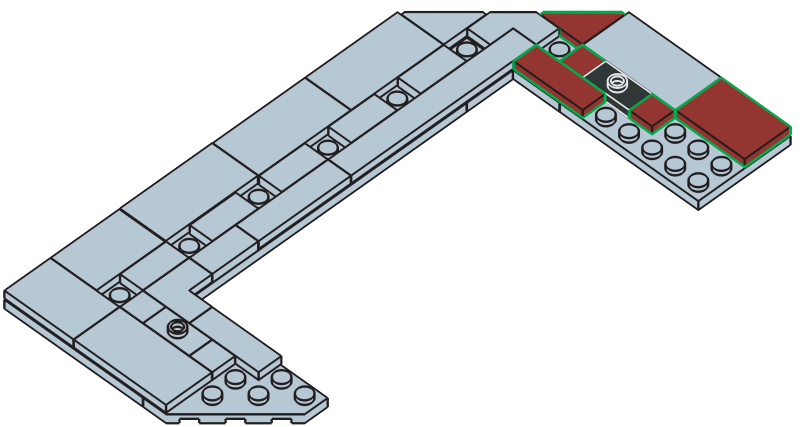

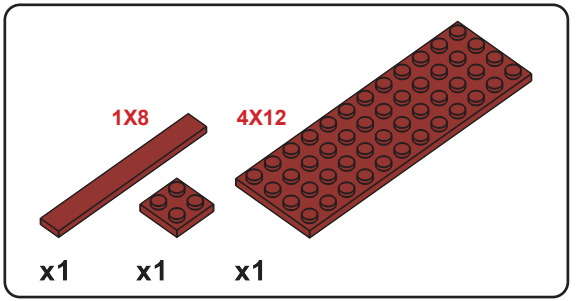

8

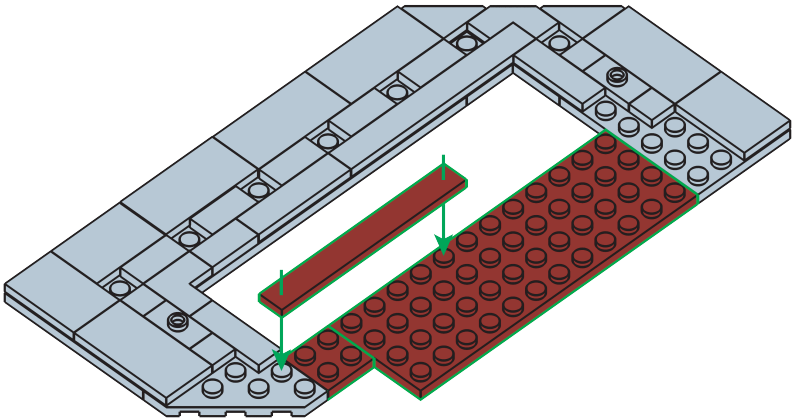

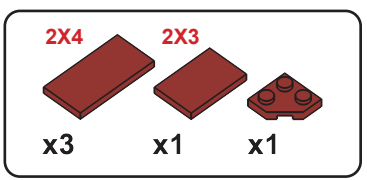

9

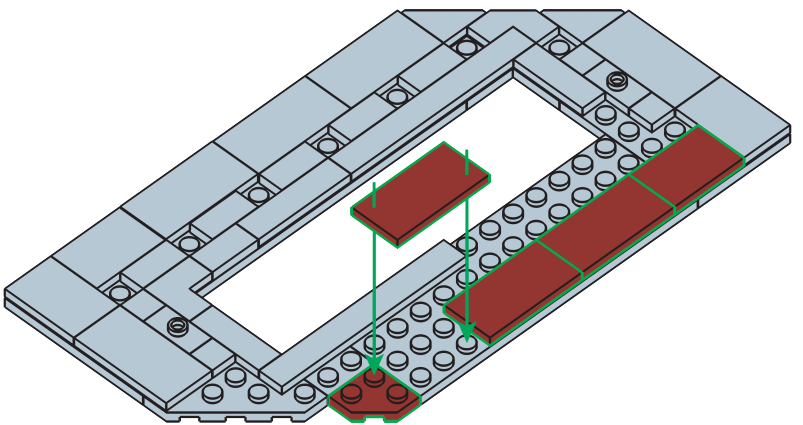

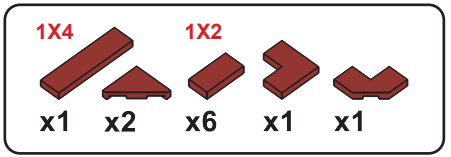

10

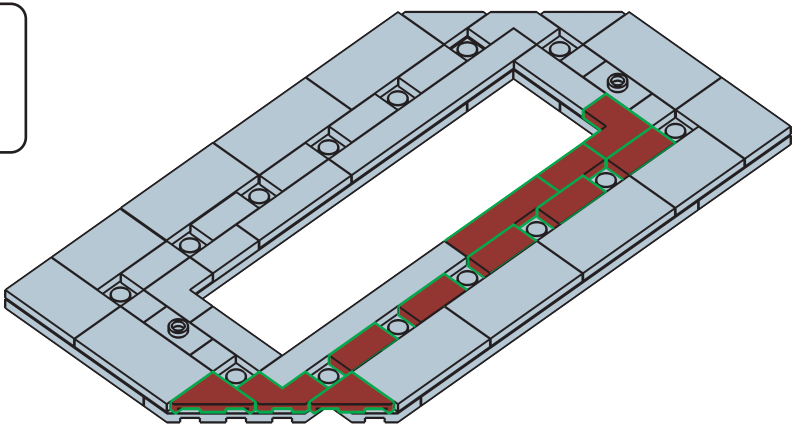

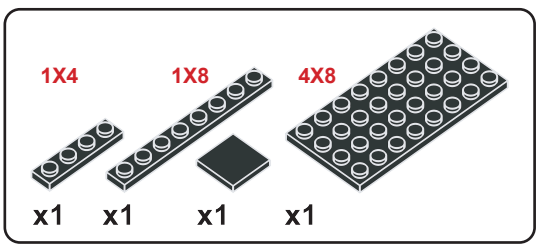

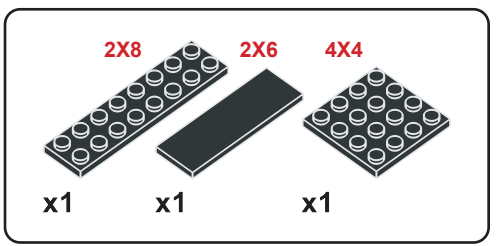

11

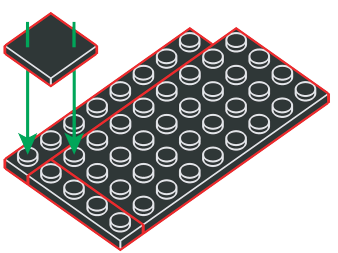

12

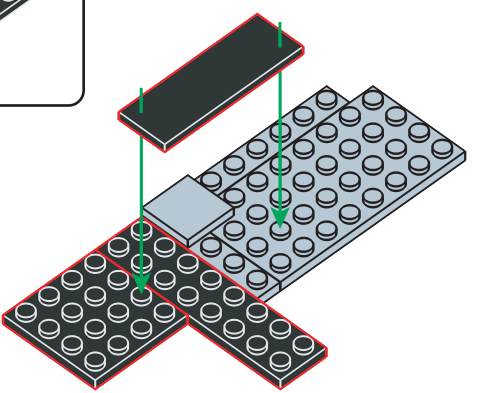

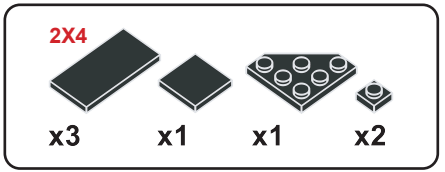

13

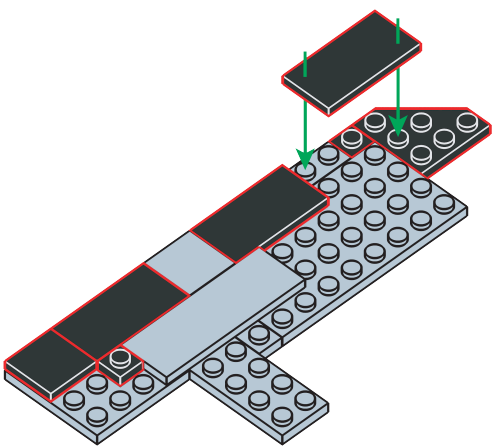

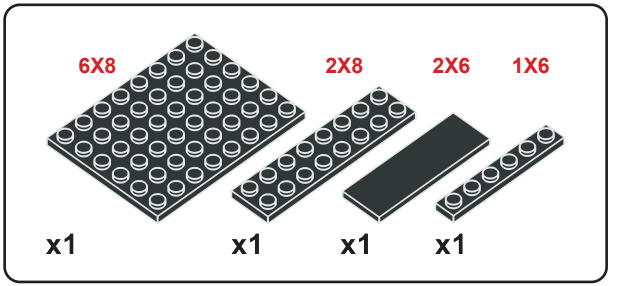

14

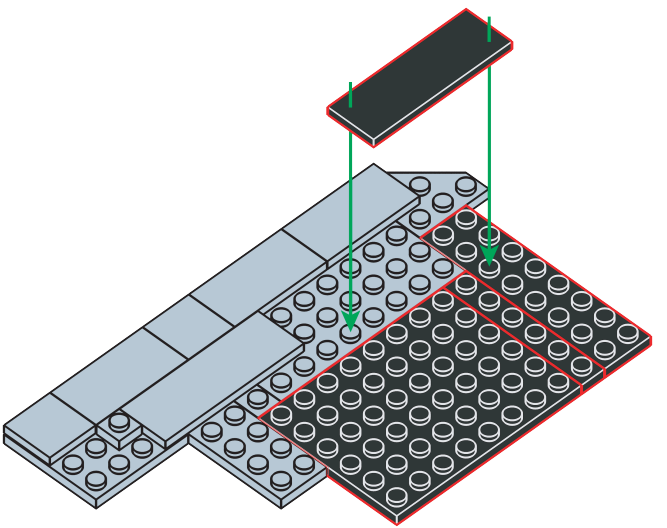

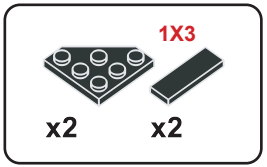

15



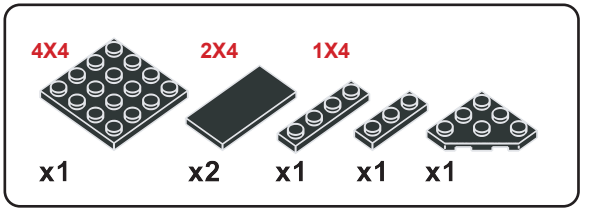

16

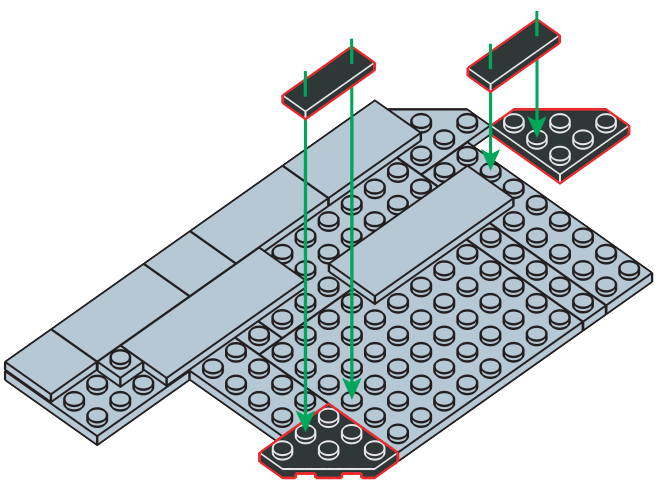

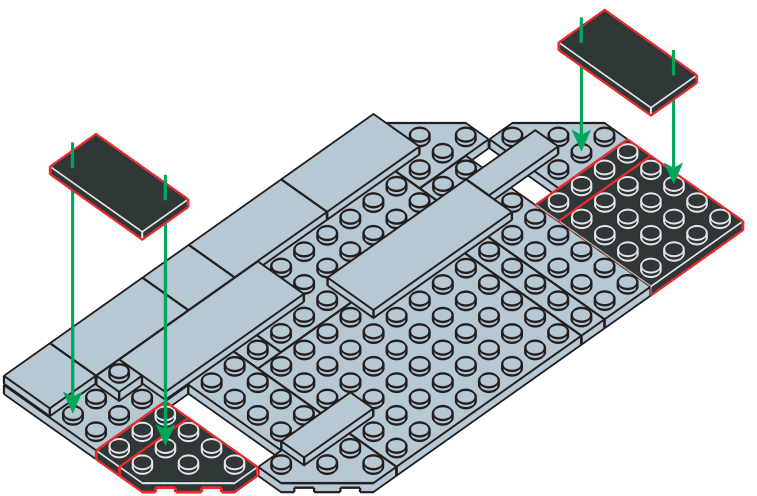

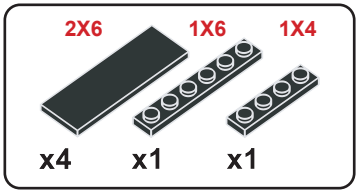

17

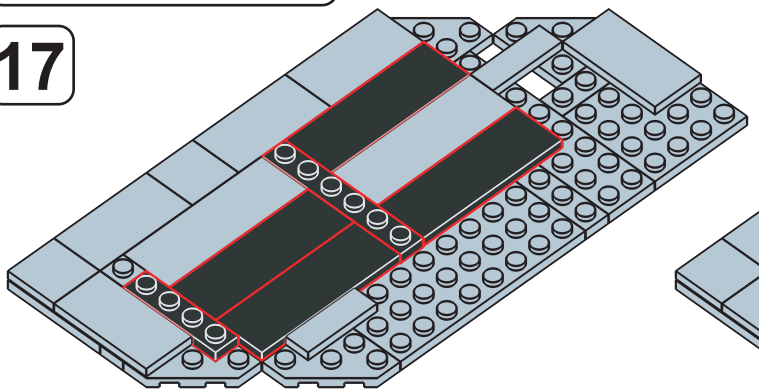

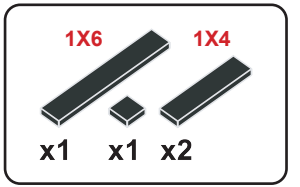

18

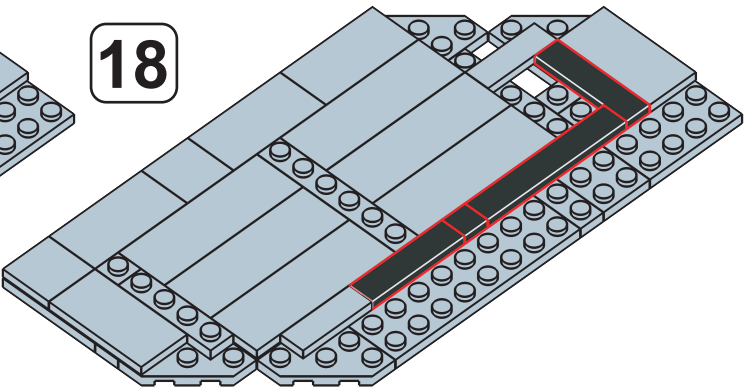

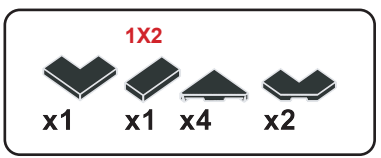

19

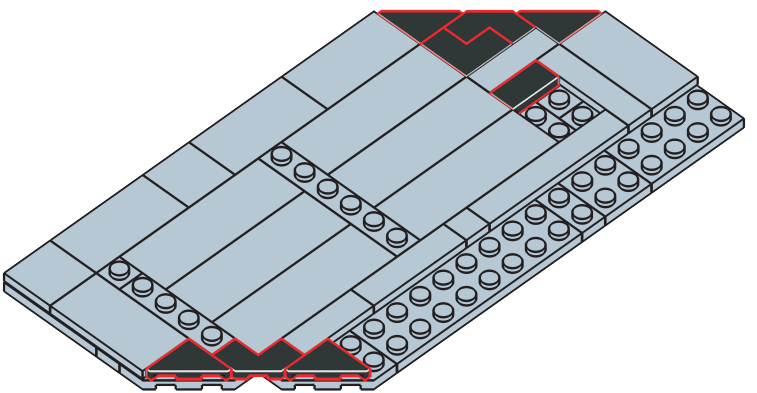

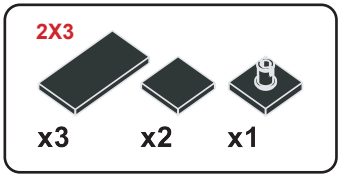

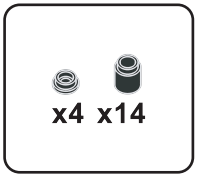

20

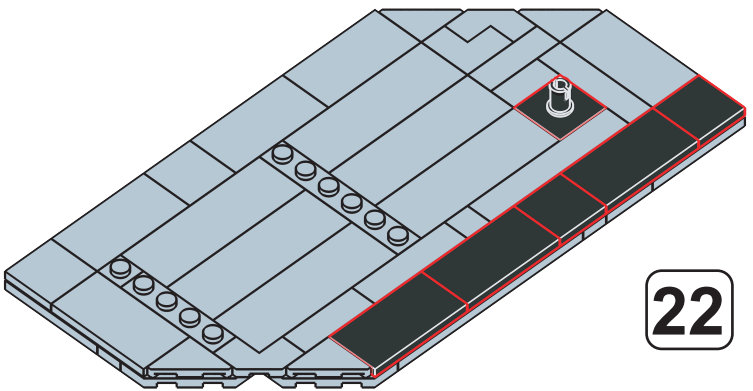

21

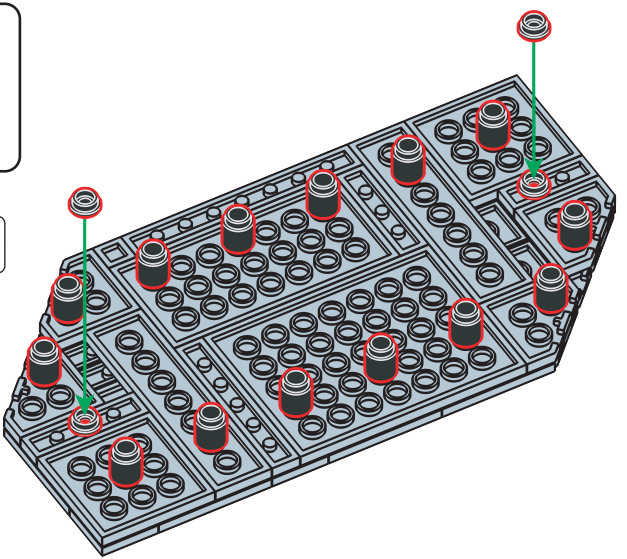

22

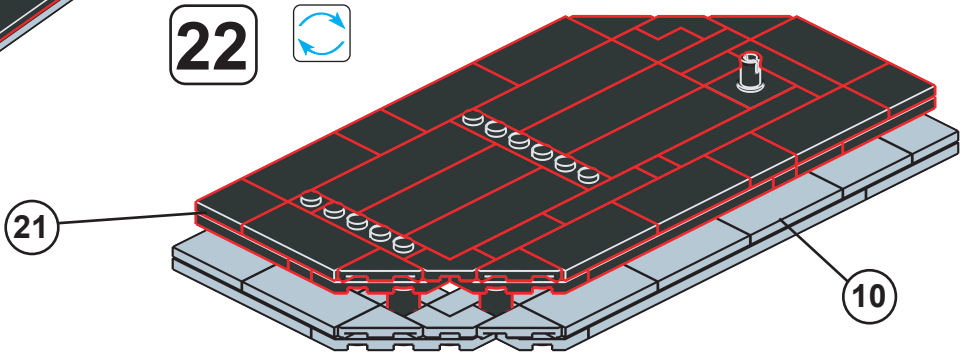

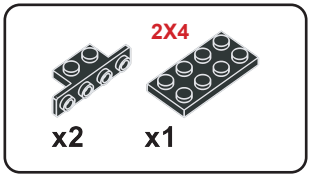

23

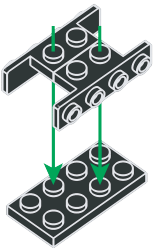

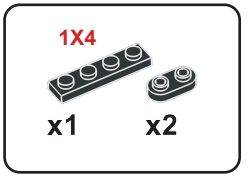

24

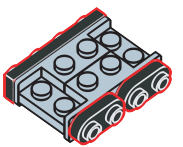

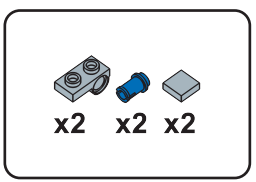

25

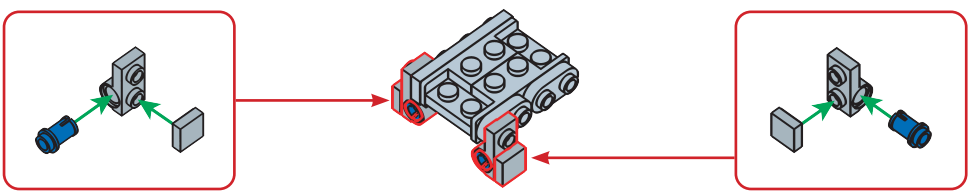

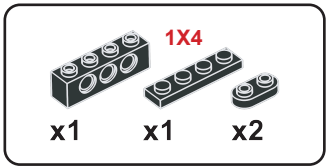

26

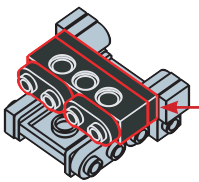

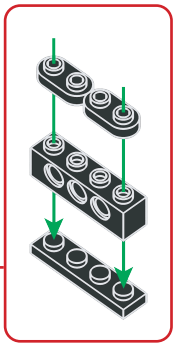

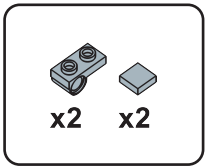

27

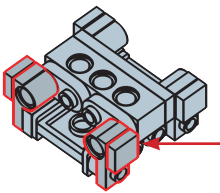

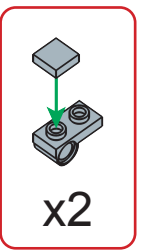

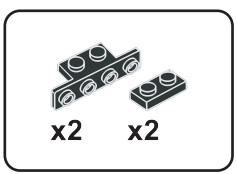

28

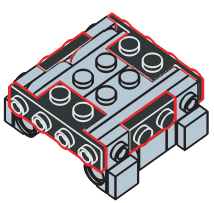

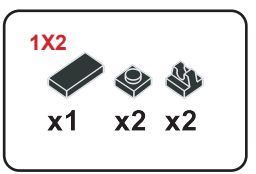

29

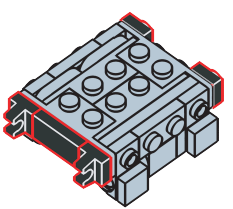

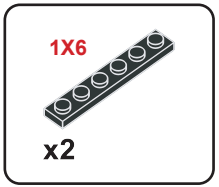

30

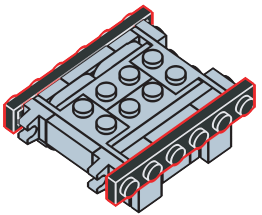



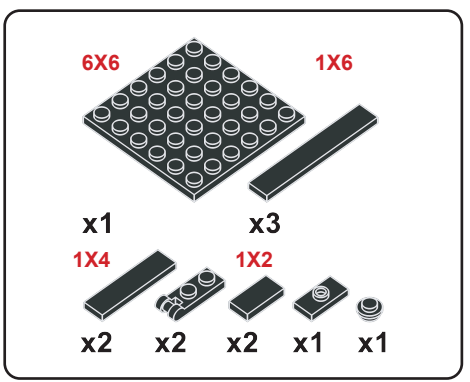

32

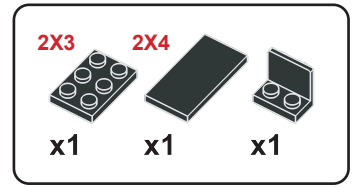

31

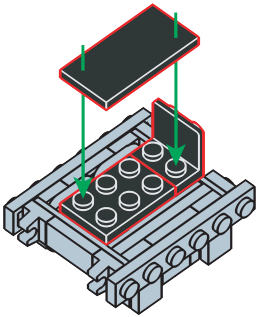

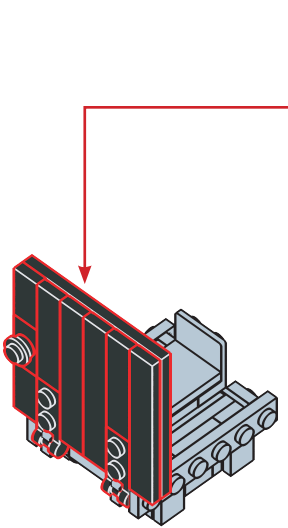

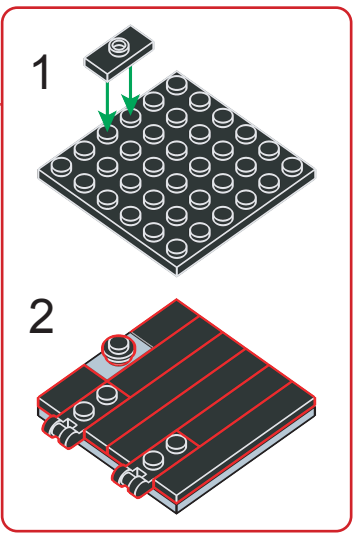

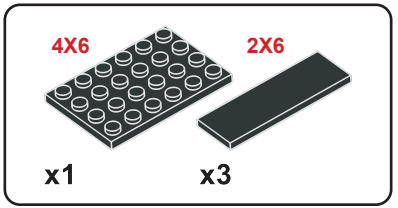

33

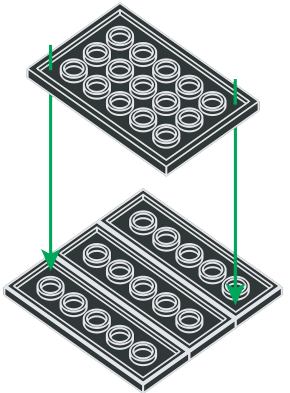



34

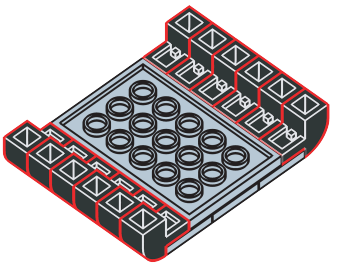

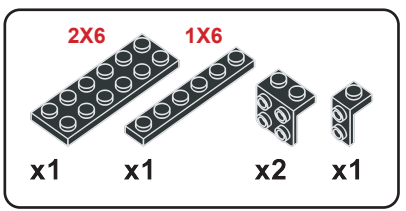

35

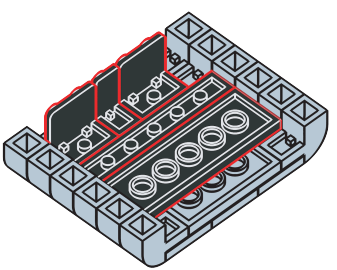

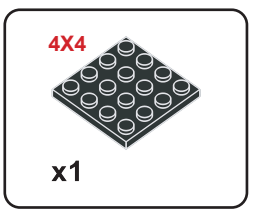

36

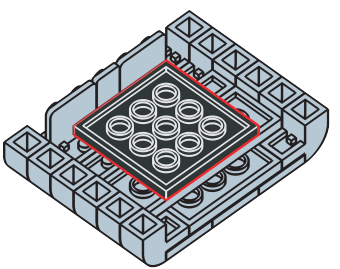

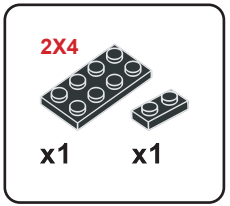

37

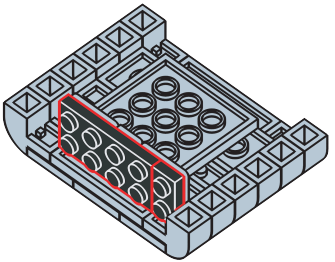

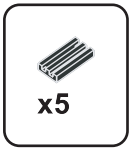

38

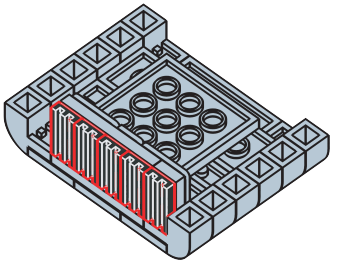

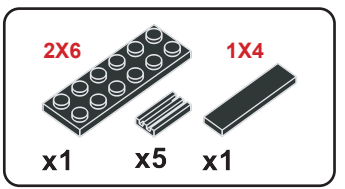

39

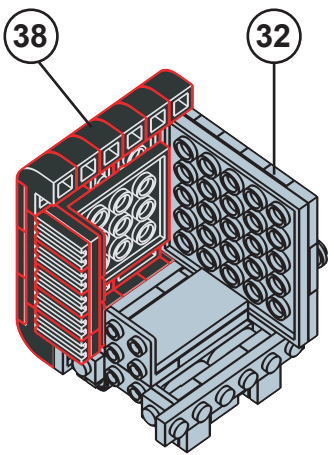

40

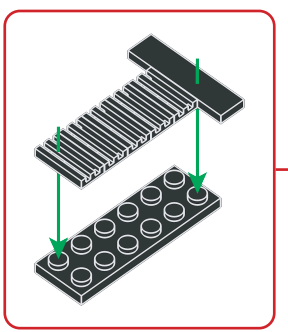

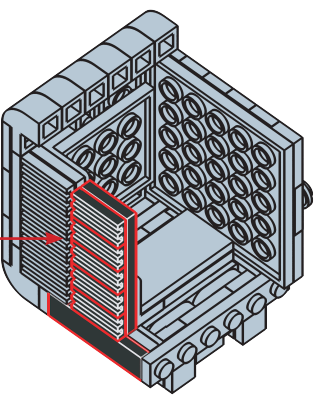

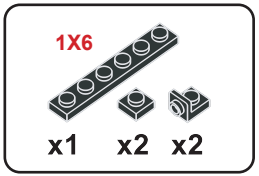

41

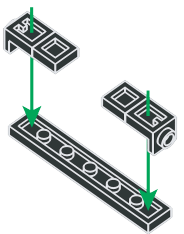

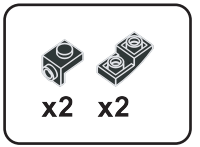

42

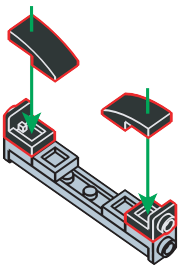

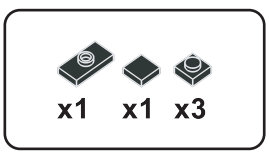

43

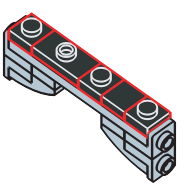

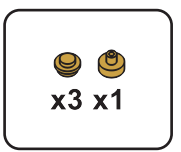

44

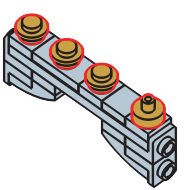

45

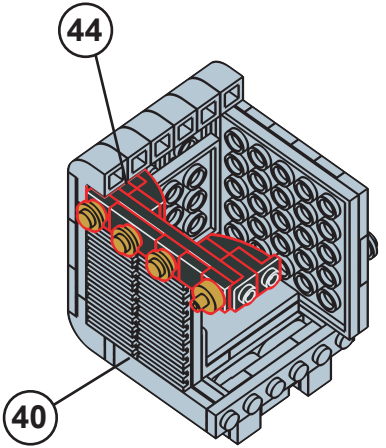

46

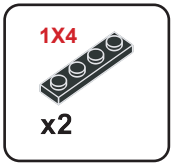

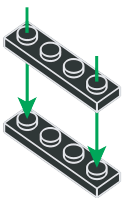

47

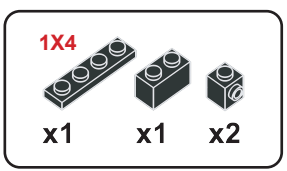

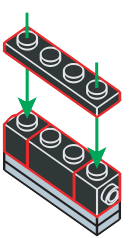



48

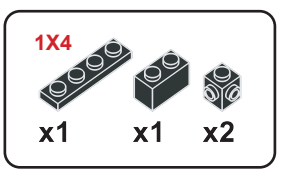

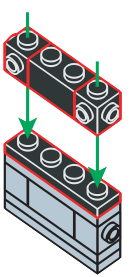

1X4 1X4

x1 x1

49

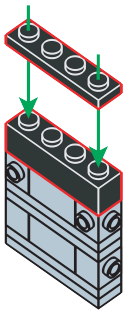

1X4

x1 x1

50

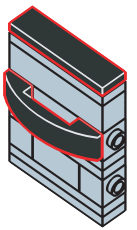

1X6

x2

51

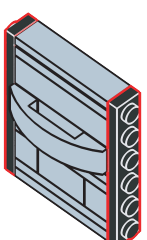

52

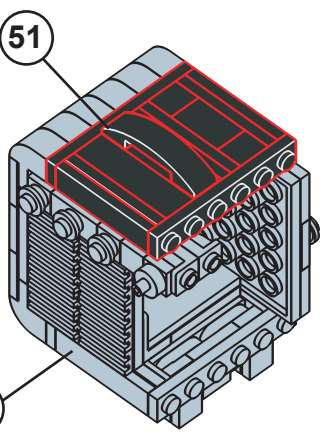

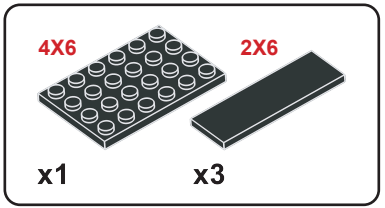

53

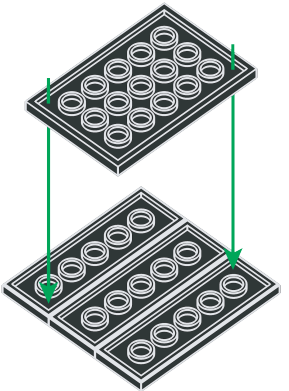



54

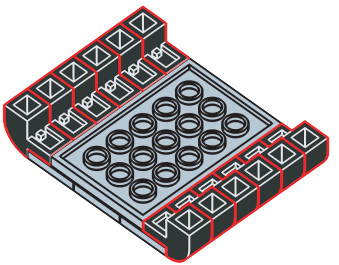

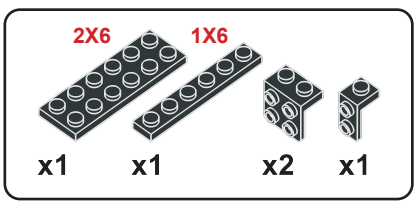

55

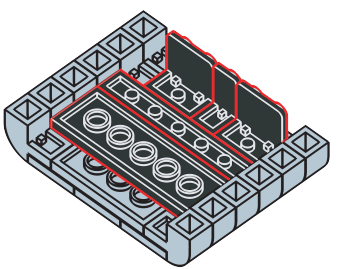

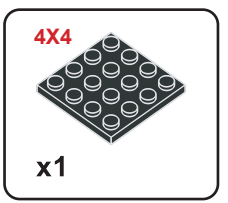

56

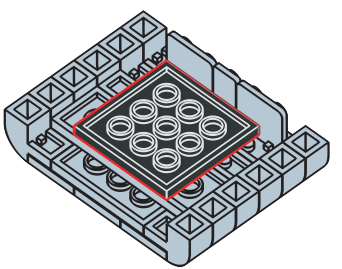

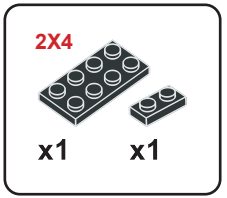

57



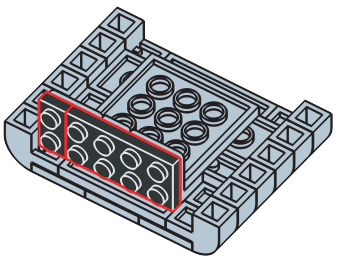

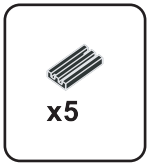

58

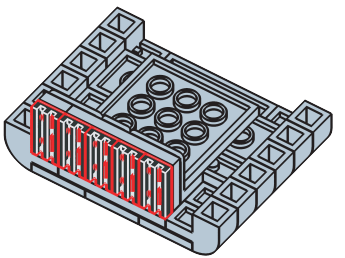

59

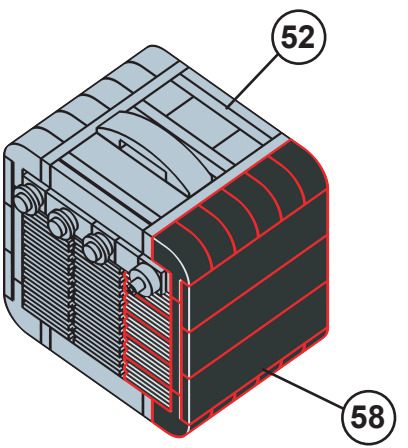

60

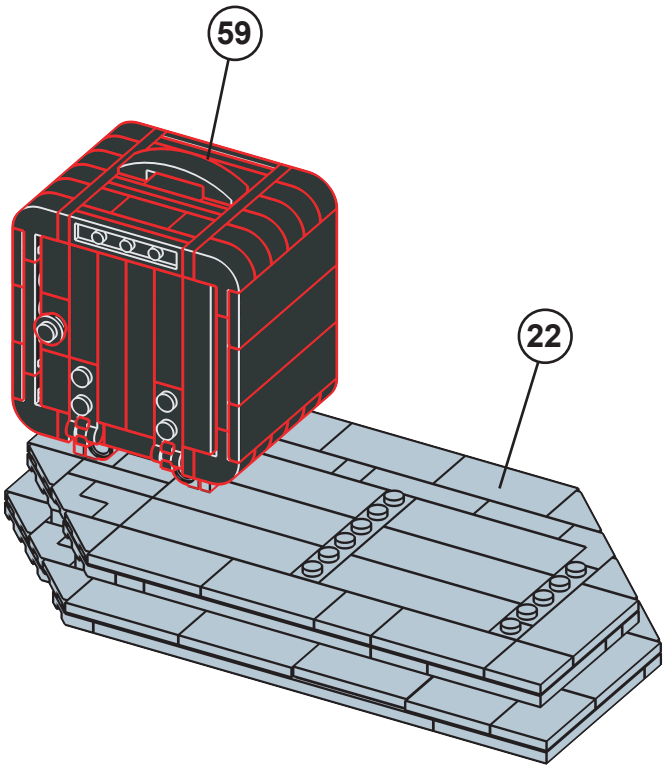

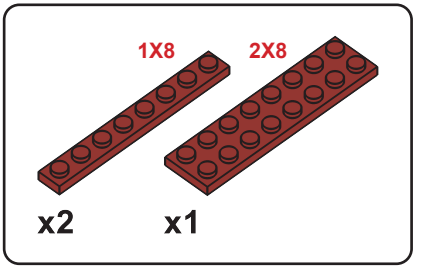

61

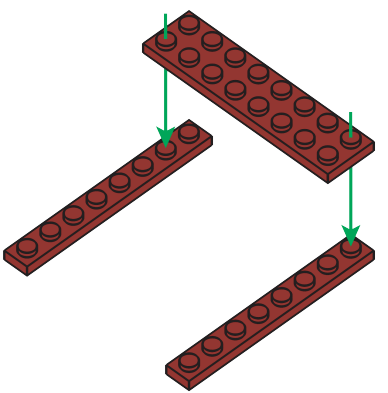

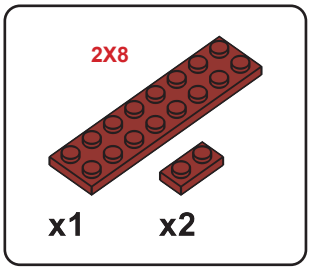

62

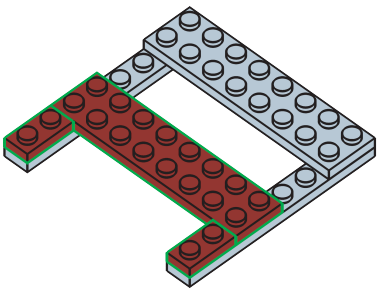

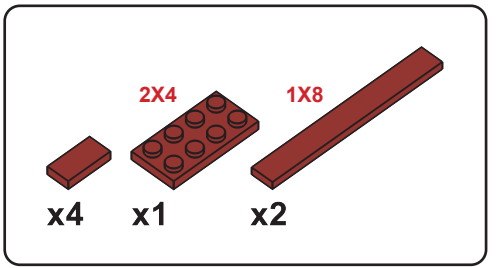

63

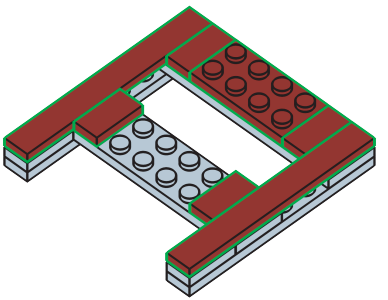



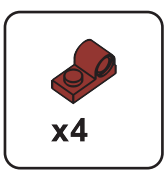

64

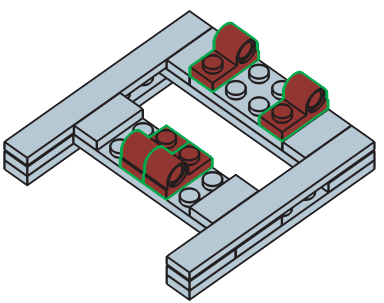



65

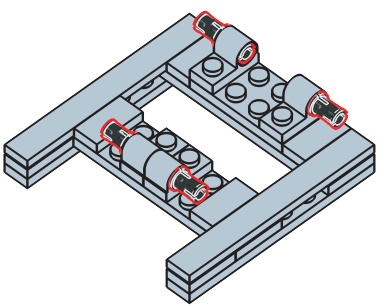

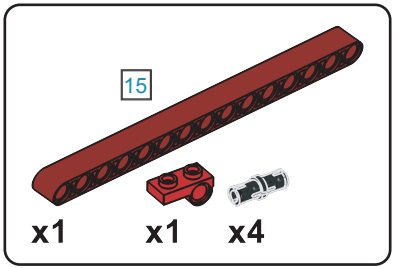

66

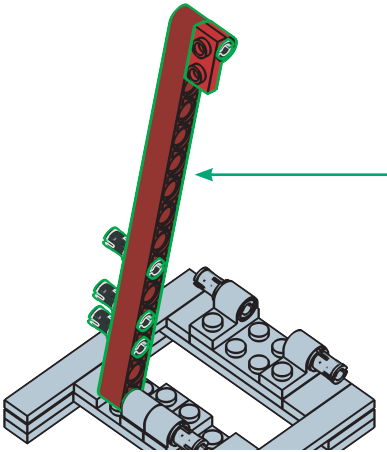

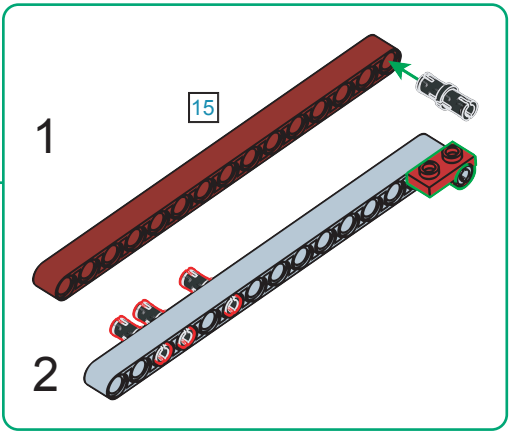

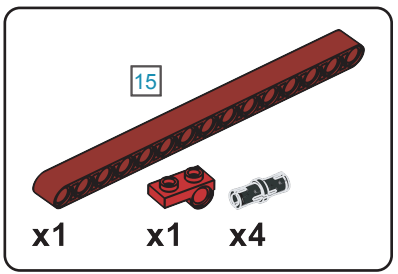

67

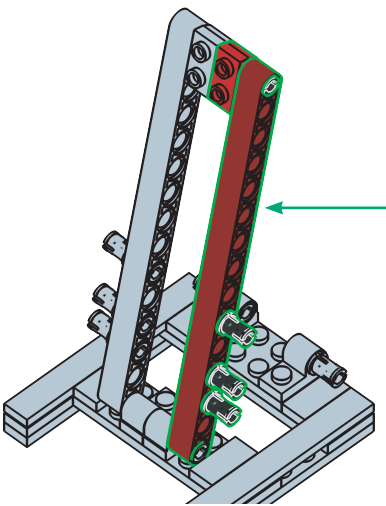

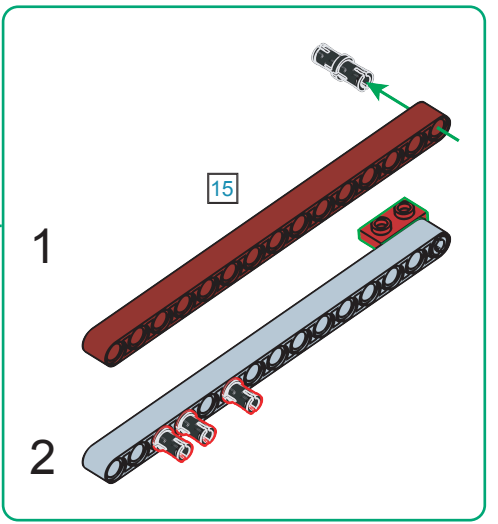

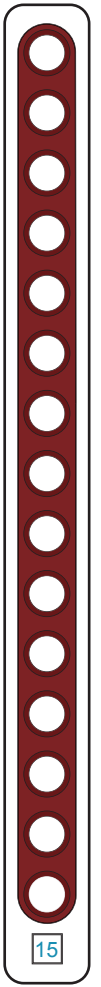

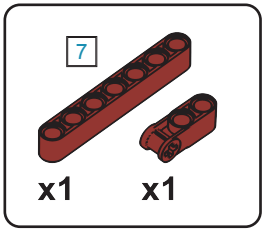

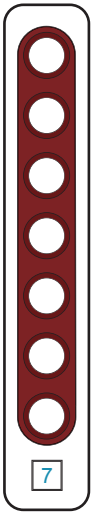

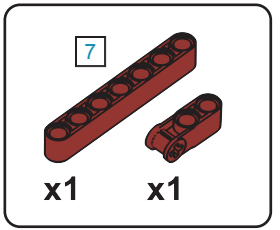

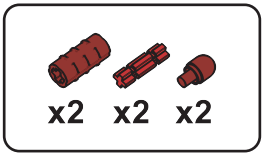

68

69

70

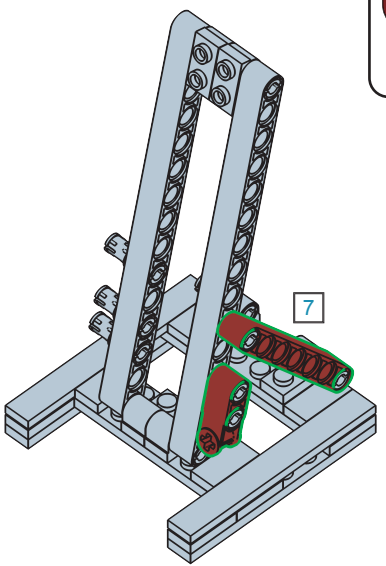

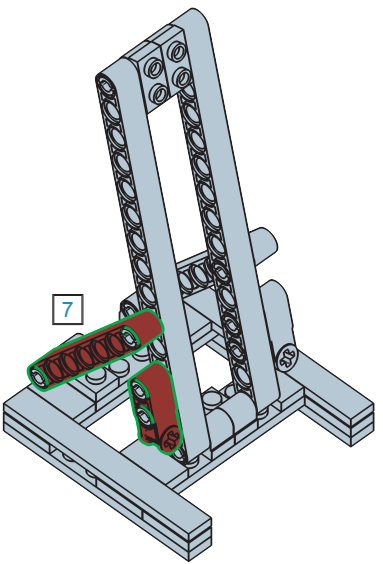

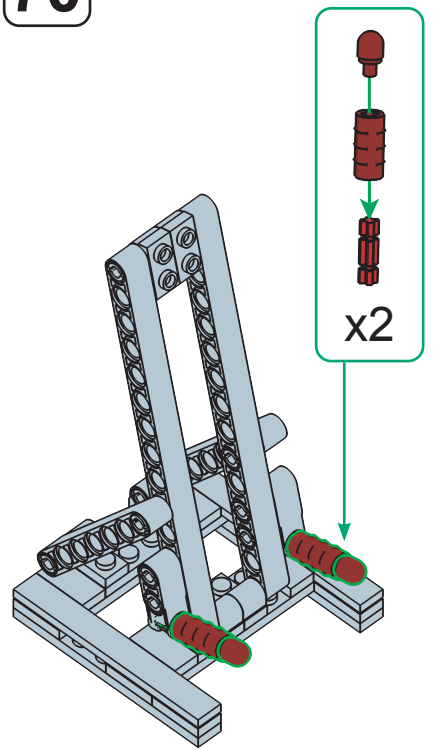

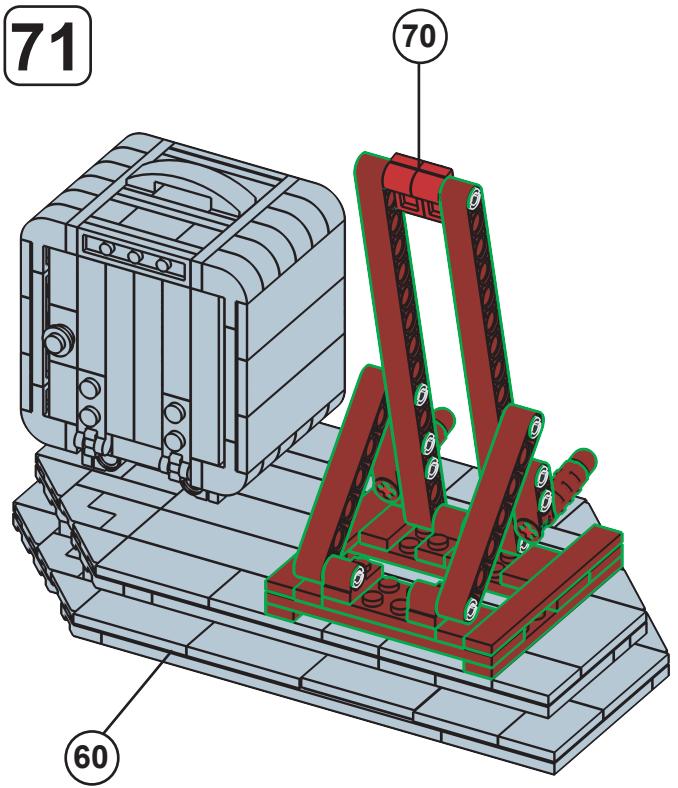

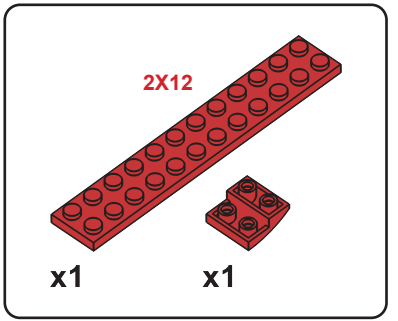

72

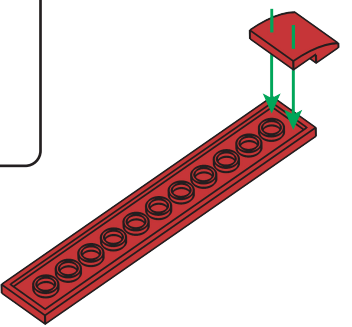

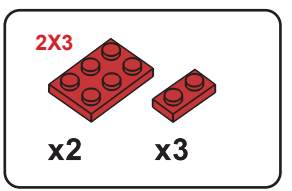

73

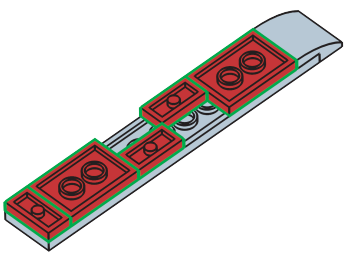

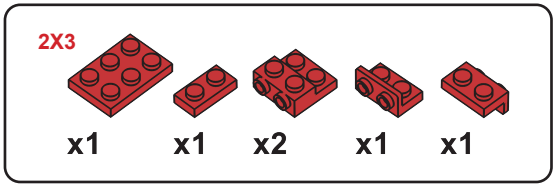

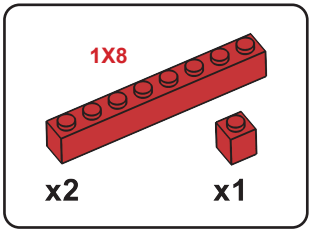

74

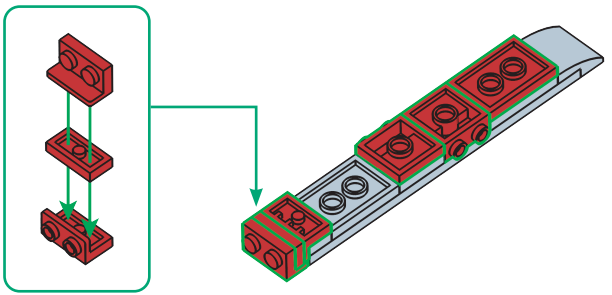

75

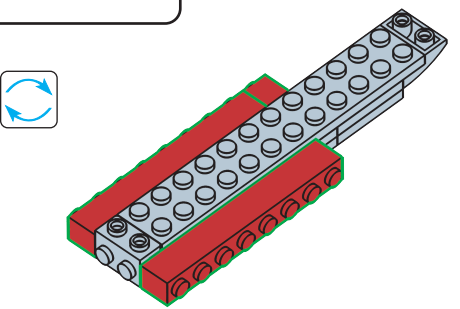

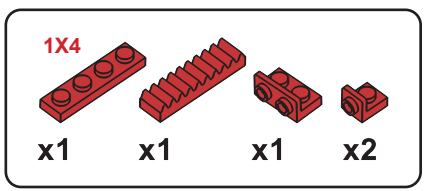

76

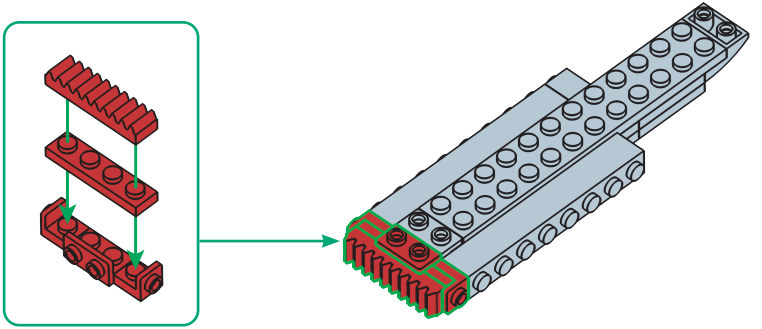

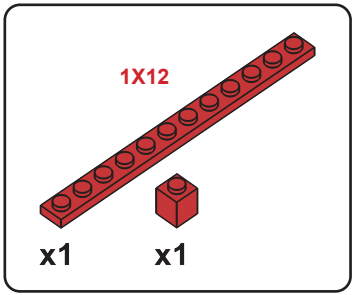

77

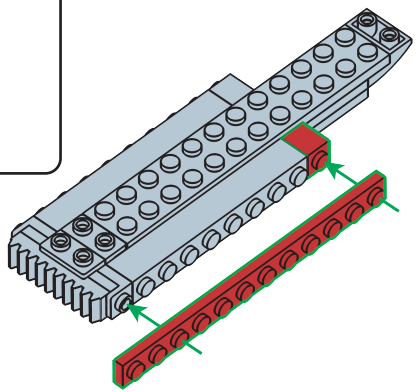

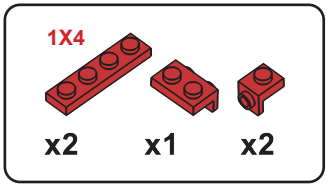

78

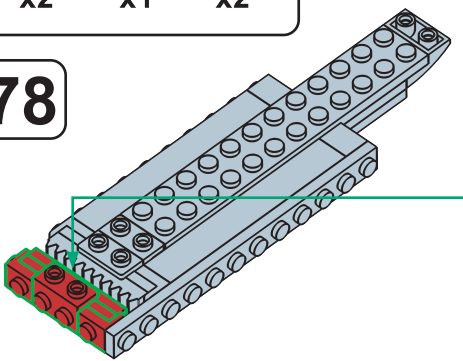

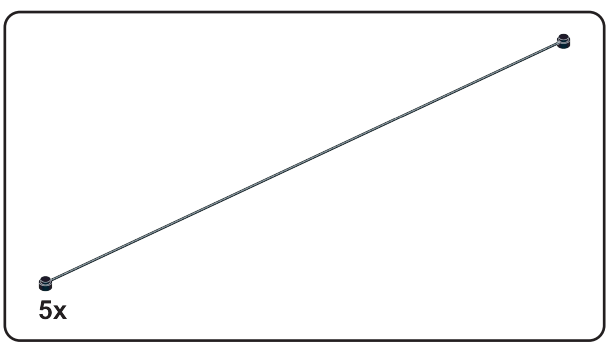

79



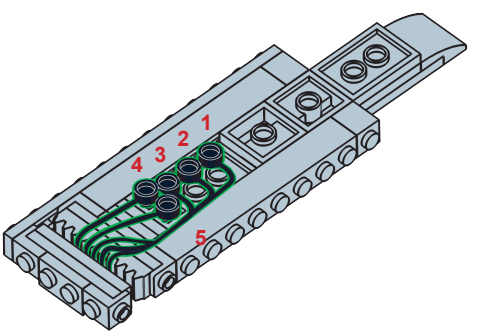

1X12

x1

80

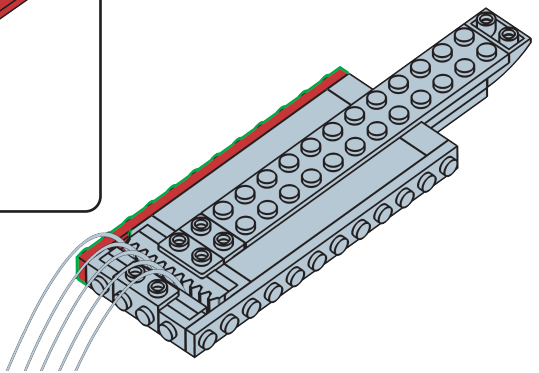

6

x12

81

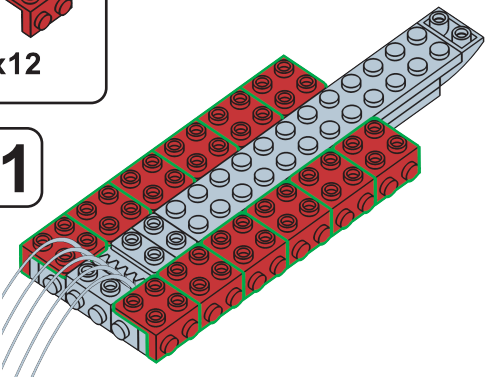

4X8

x1

x4

82

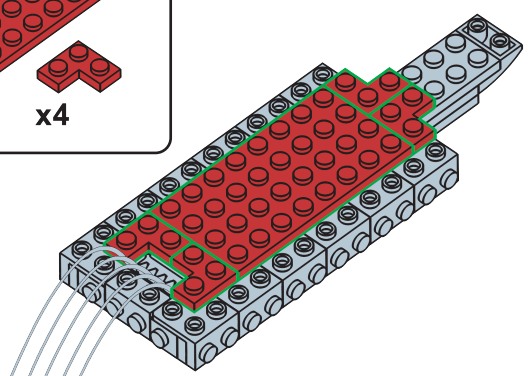

1X12

x2

x1

x2

83

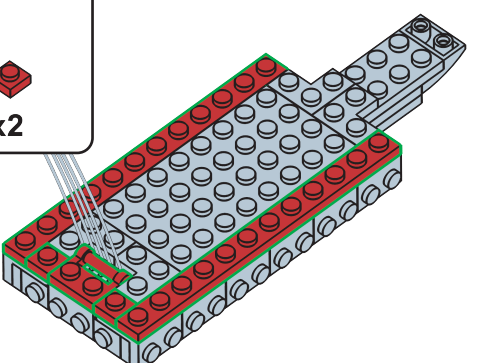

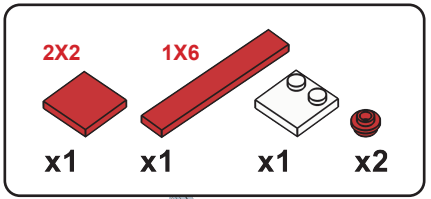

84

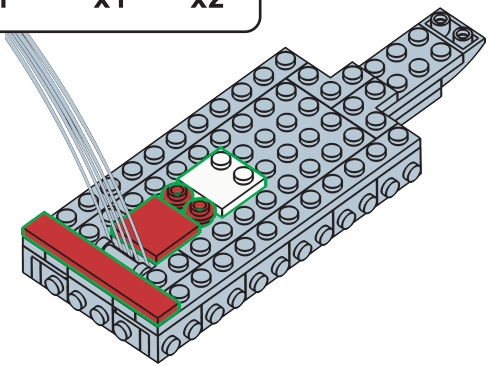

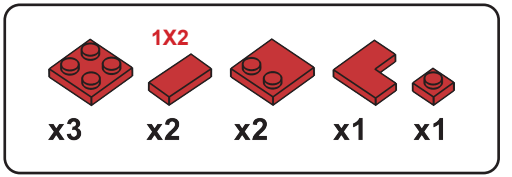

85

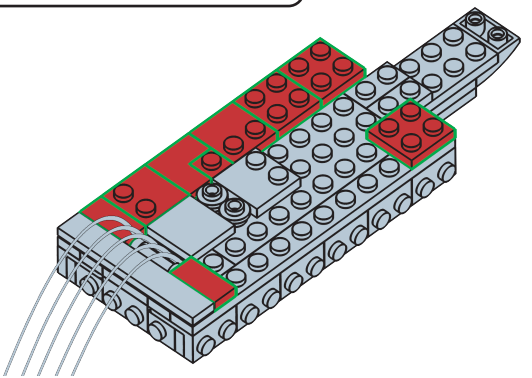

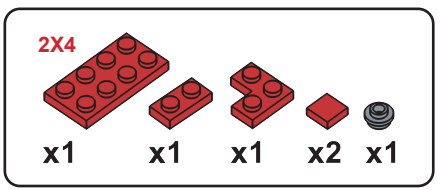

86

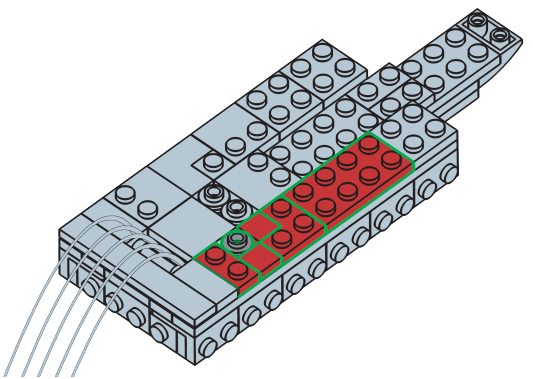

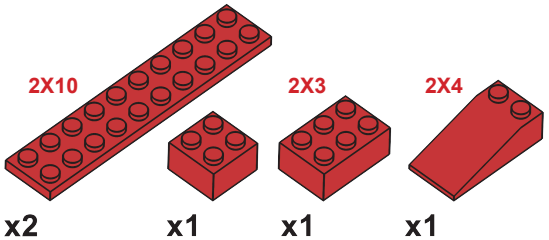

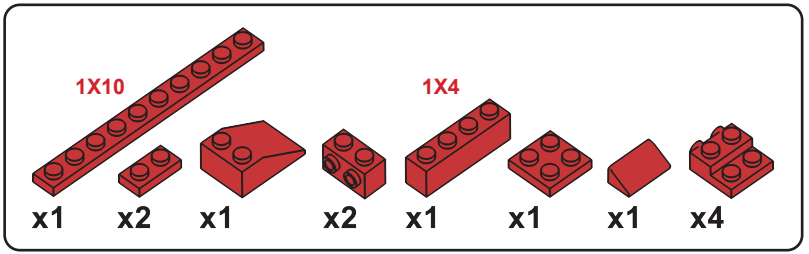

87

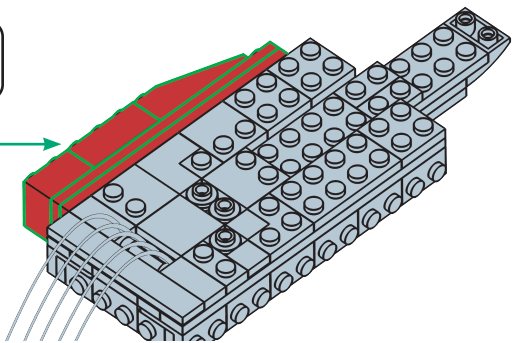

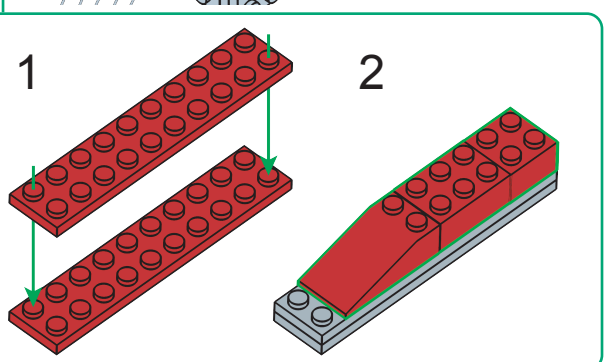

88

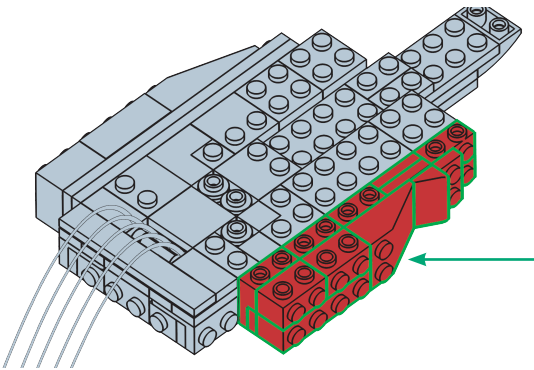

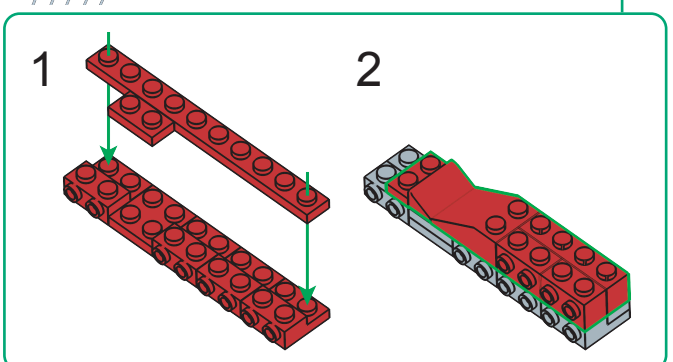

x1 x1

89

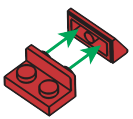

x2 x1

90

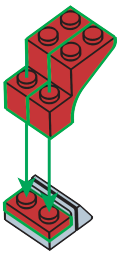

x1 x1

91

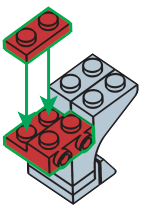

2X3

x1 x1 x1

92

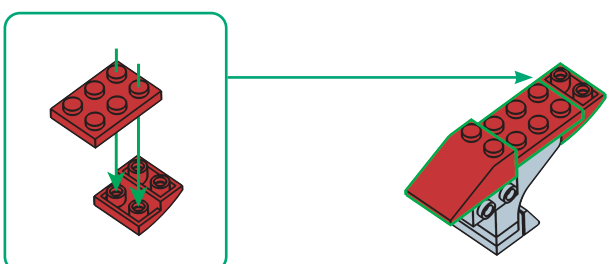

x1 x1

93

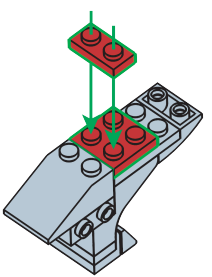

x1 x1

94

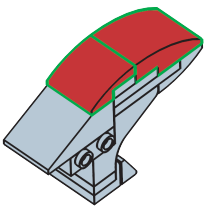

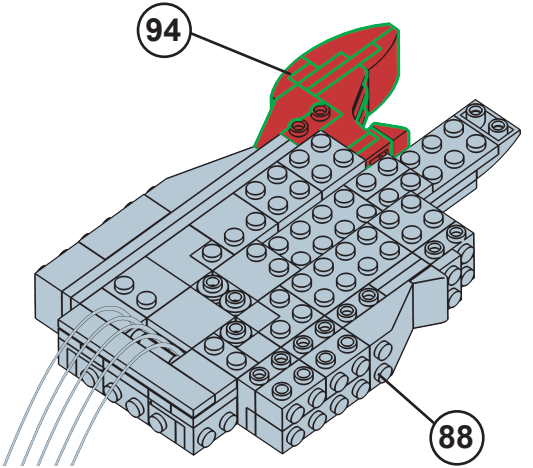

95

2X4 2X3

x1 x1

96

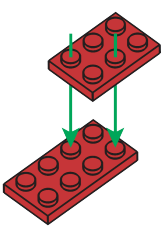



x1 x1 x1

97

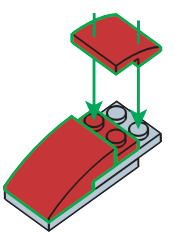

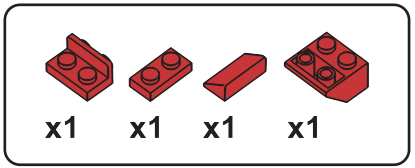

98



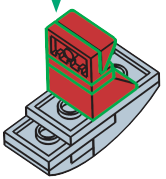

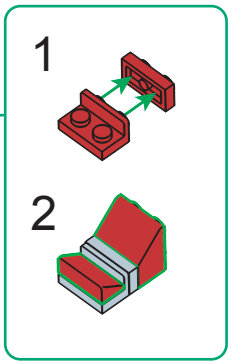

99

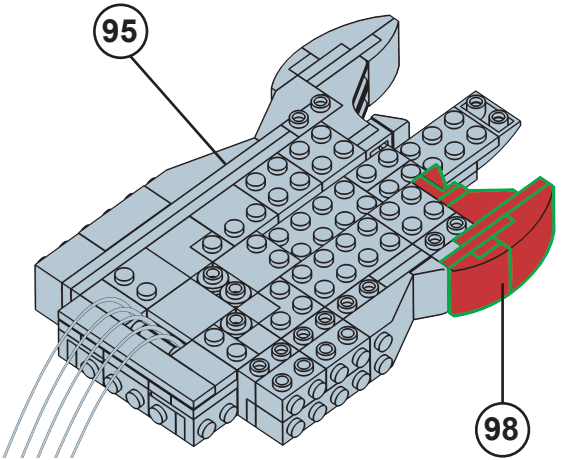

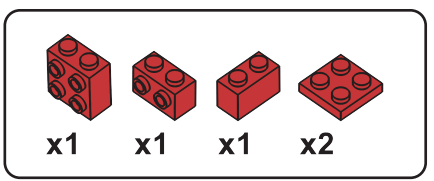

100

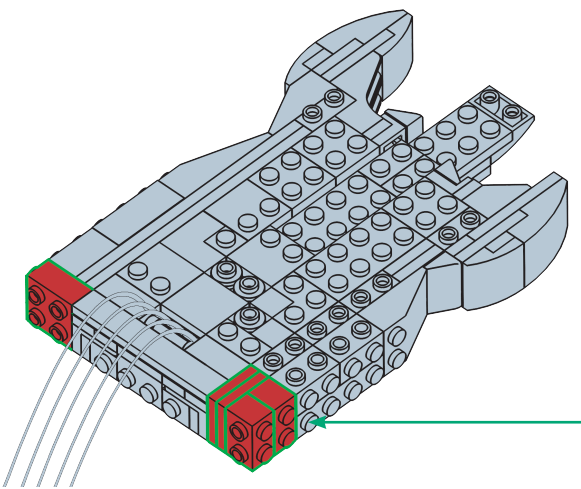

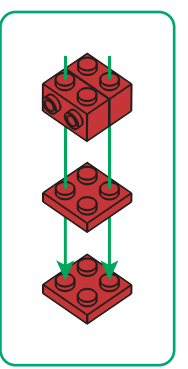

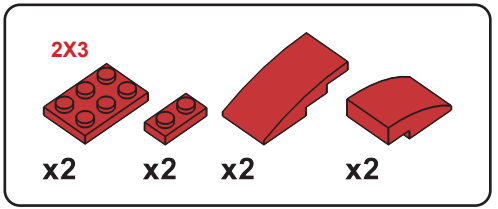

101

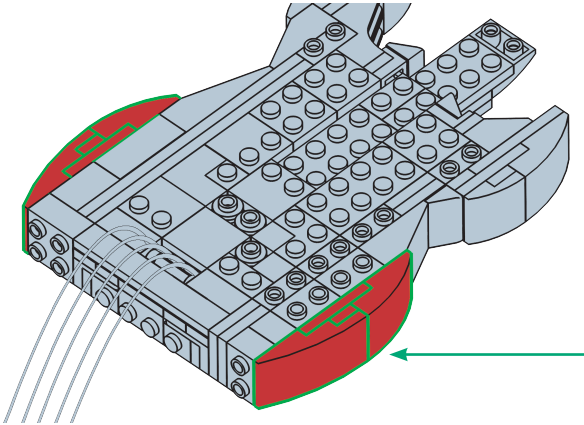

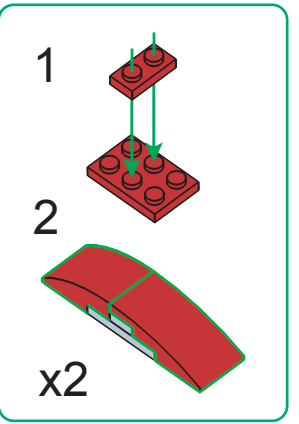

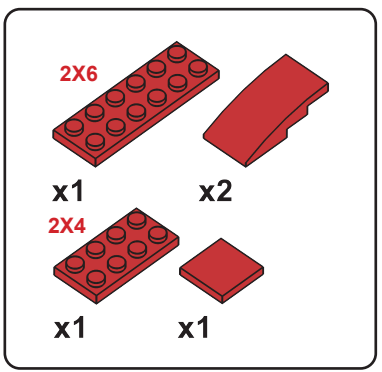

102

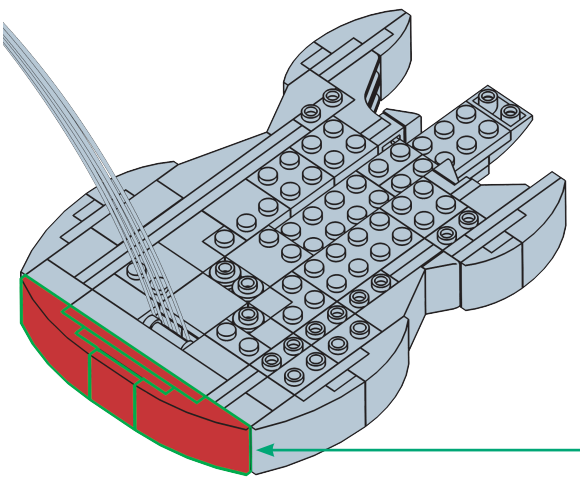

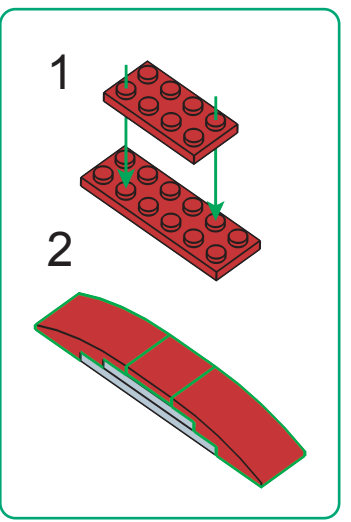

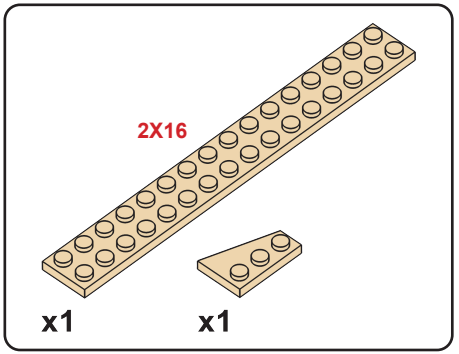

103

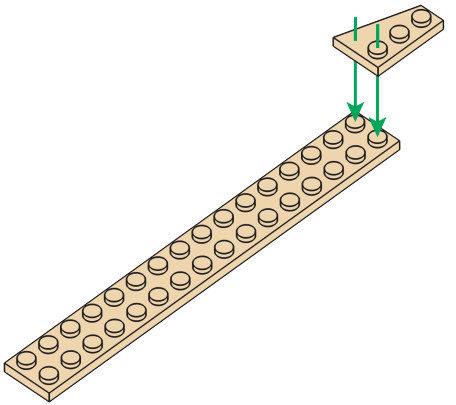

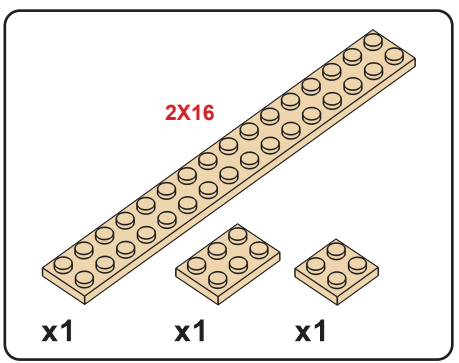

104

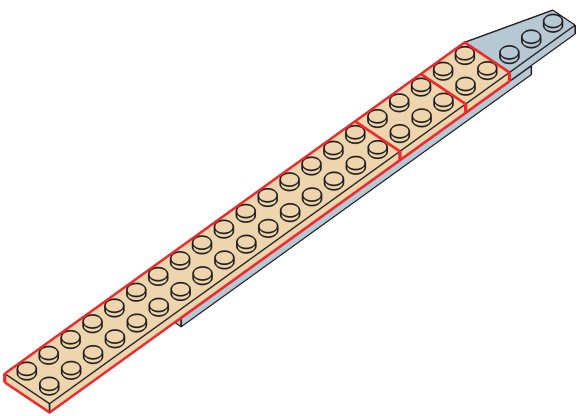

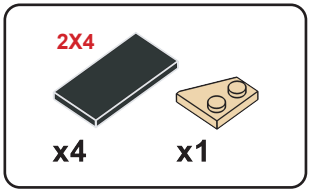

105

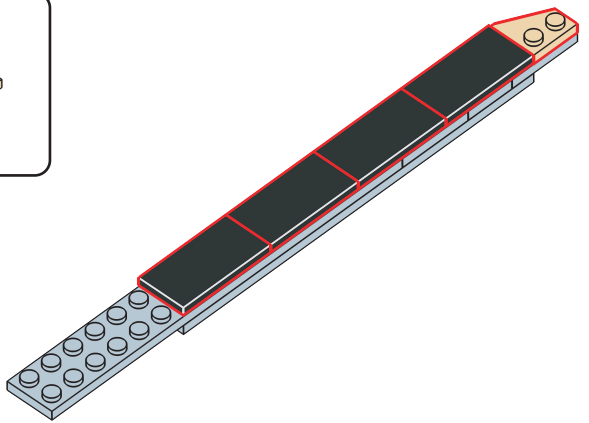

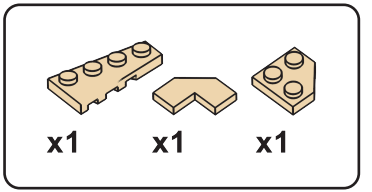

106

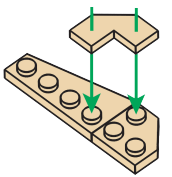

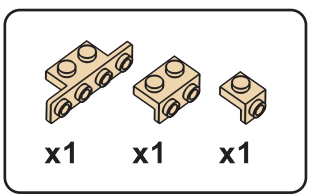

107

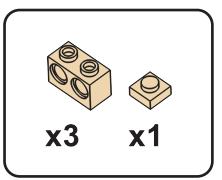

108

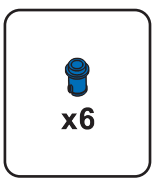

109

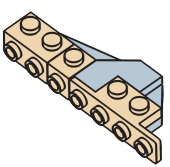

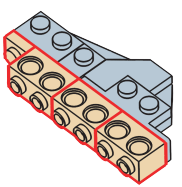

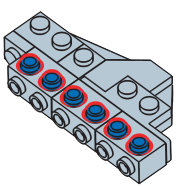

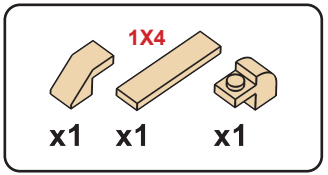

110

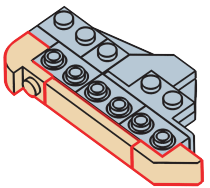

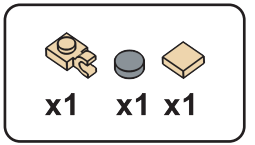

111

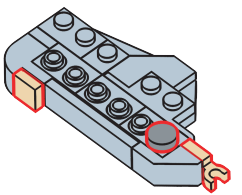

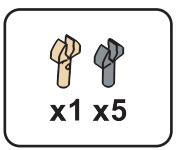

112





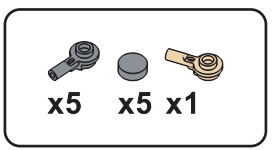

113

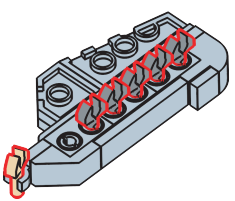

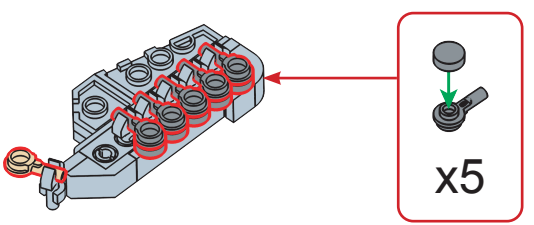

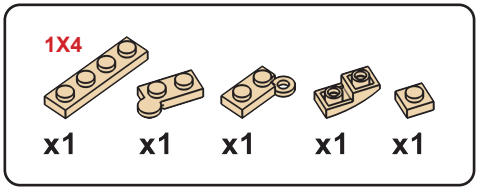

114

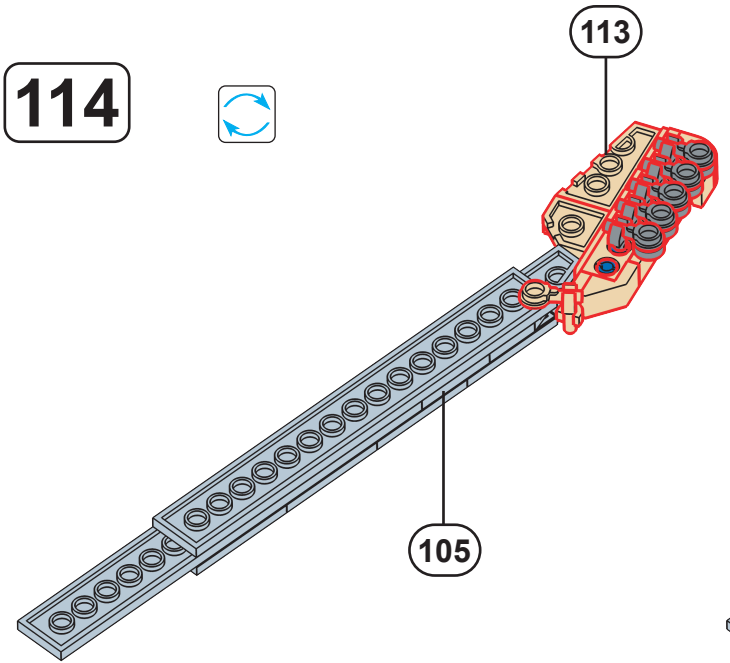

115

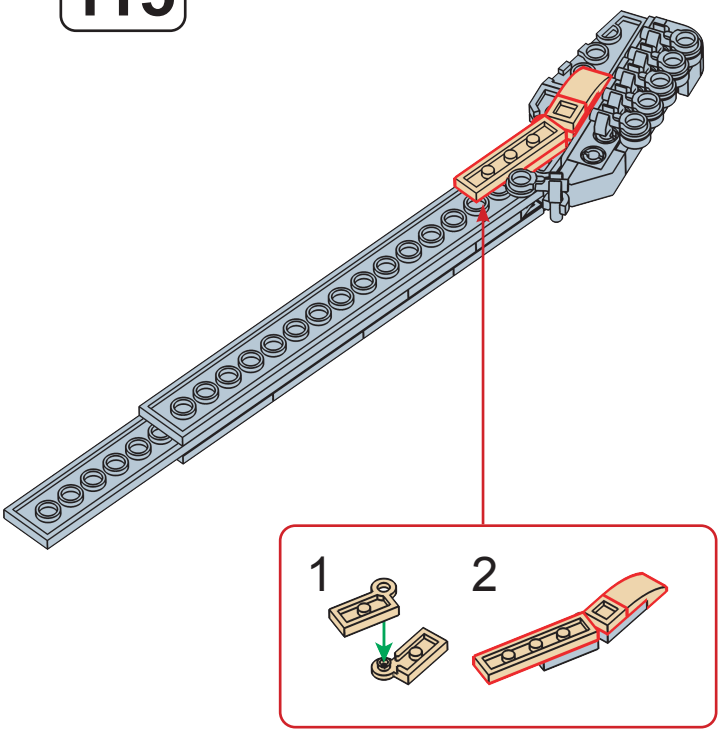

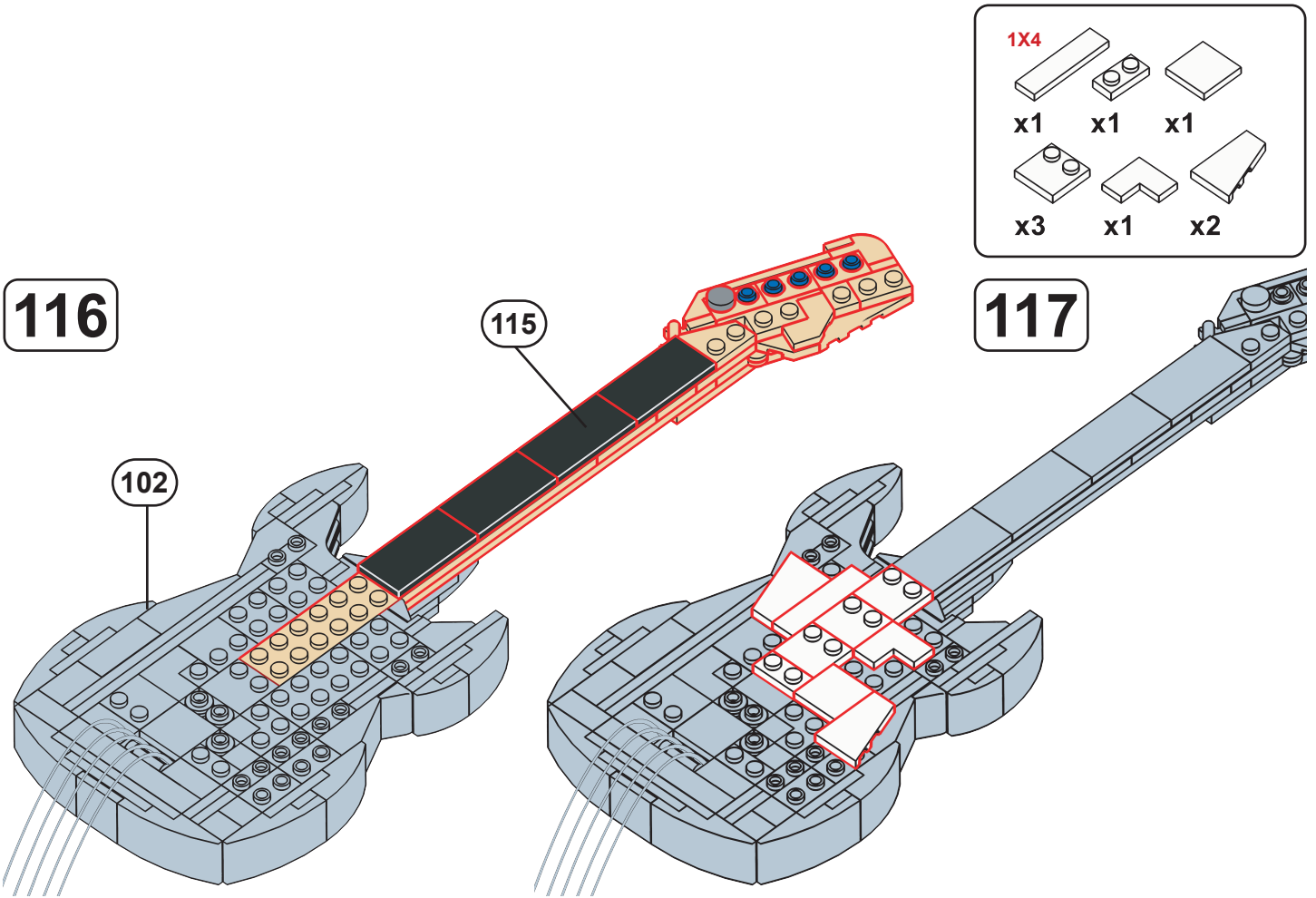
1X4
x1
x1
x1
x3
x1
x2
116
115
102
117

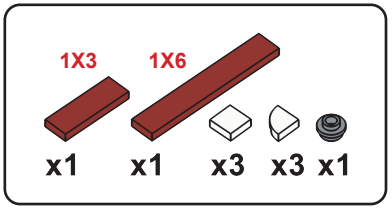

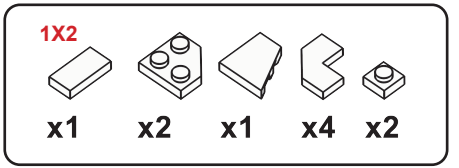

118

119

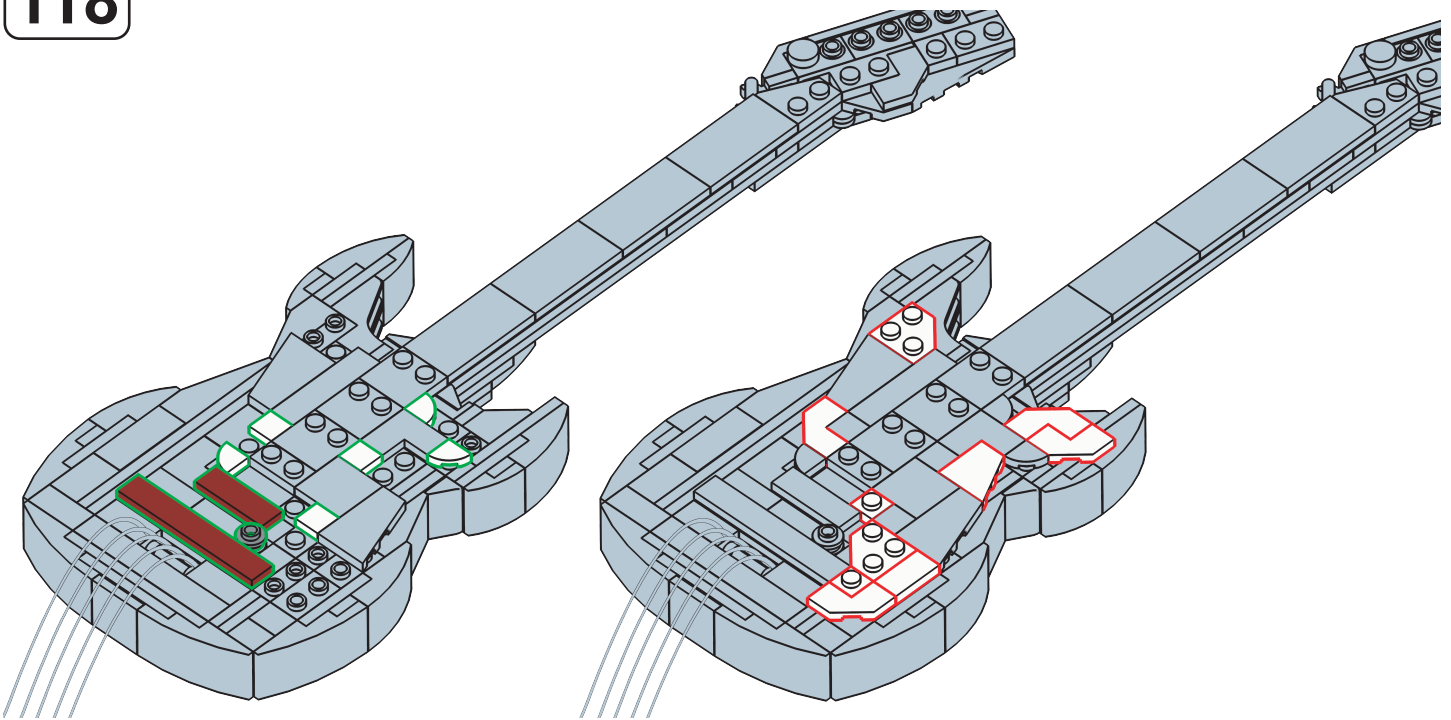

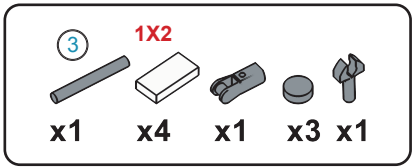



120

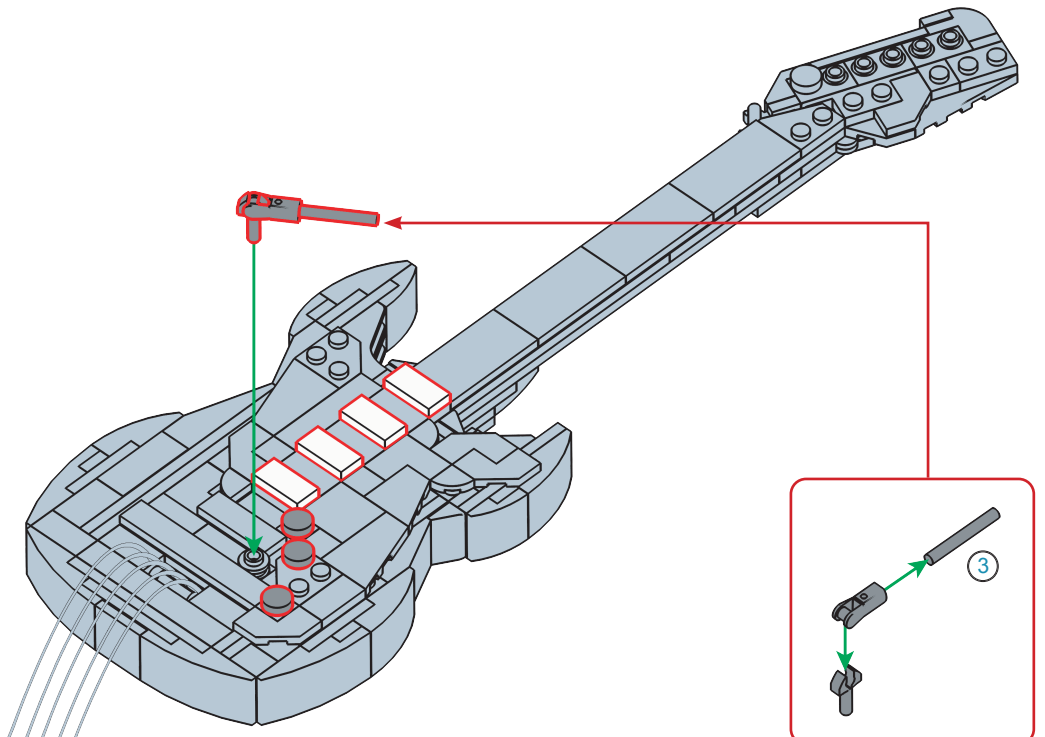

121

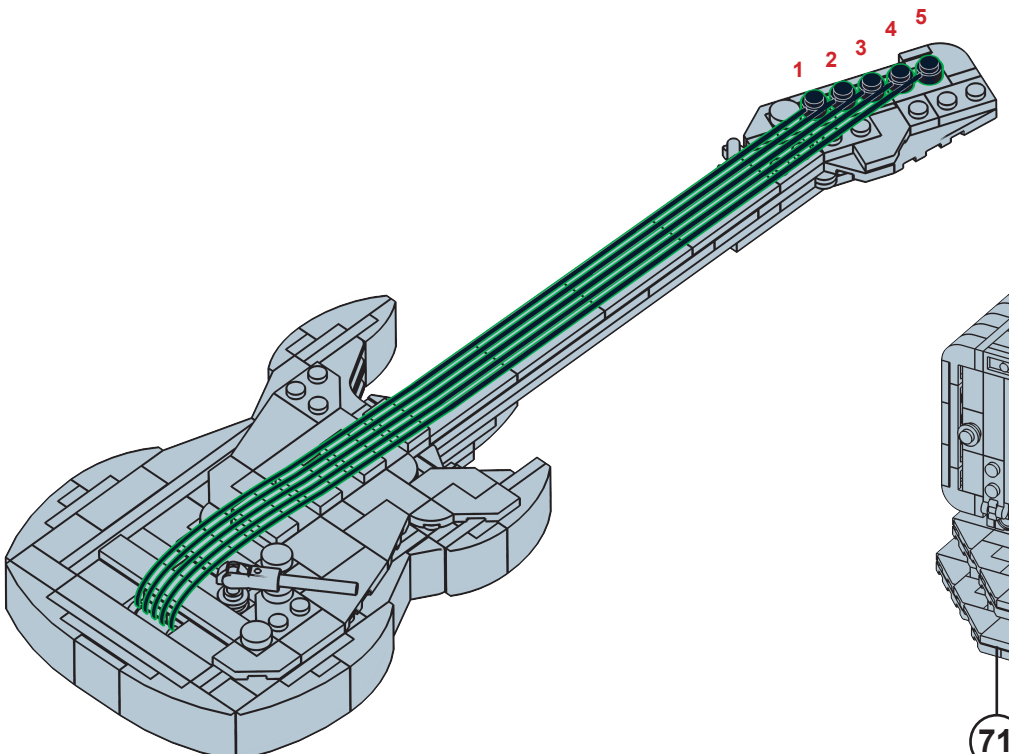

122

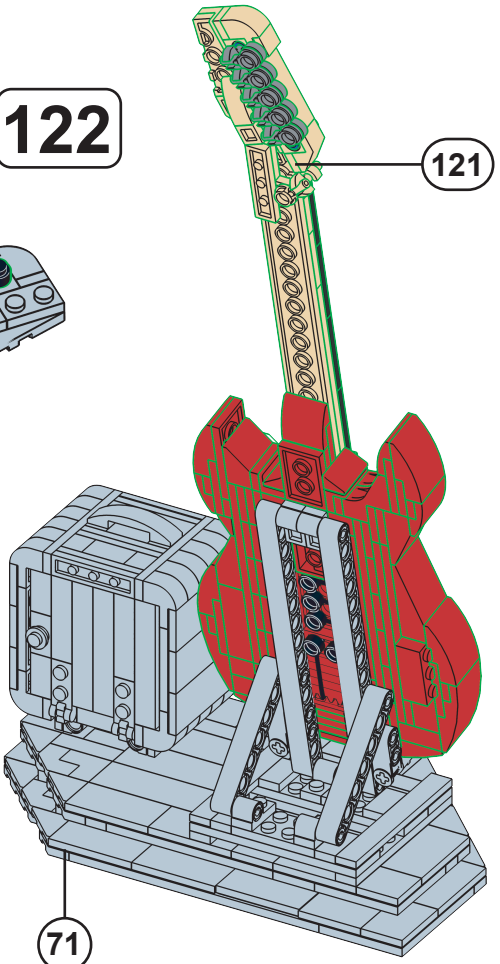

anko

miniblocks
Guitar with Speaker



⚠ **WARNING:** CHOKING HAZARD-SMALL PARTS.
NOT SUITABLE FOR CHILDREN UNDER 3 YEARS.

ADULT ASSISTANCE IS RECOMMENDED.
PRODUCT MAY VARY SLIGHTLY FROM IMAGE SHOWN.