anko

CAMILLE TROLLEY WHITE

Instruction Manual

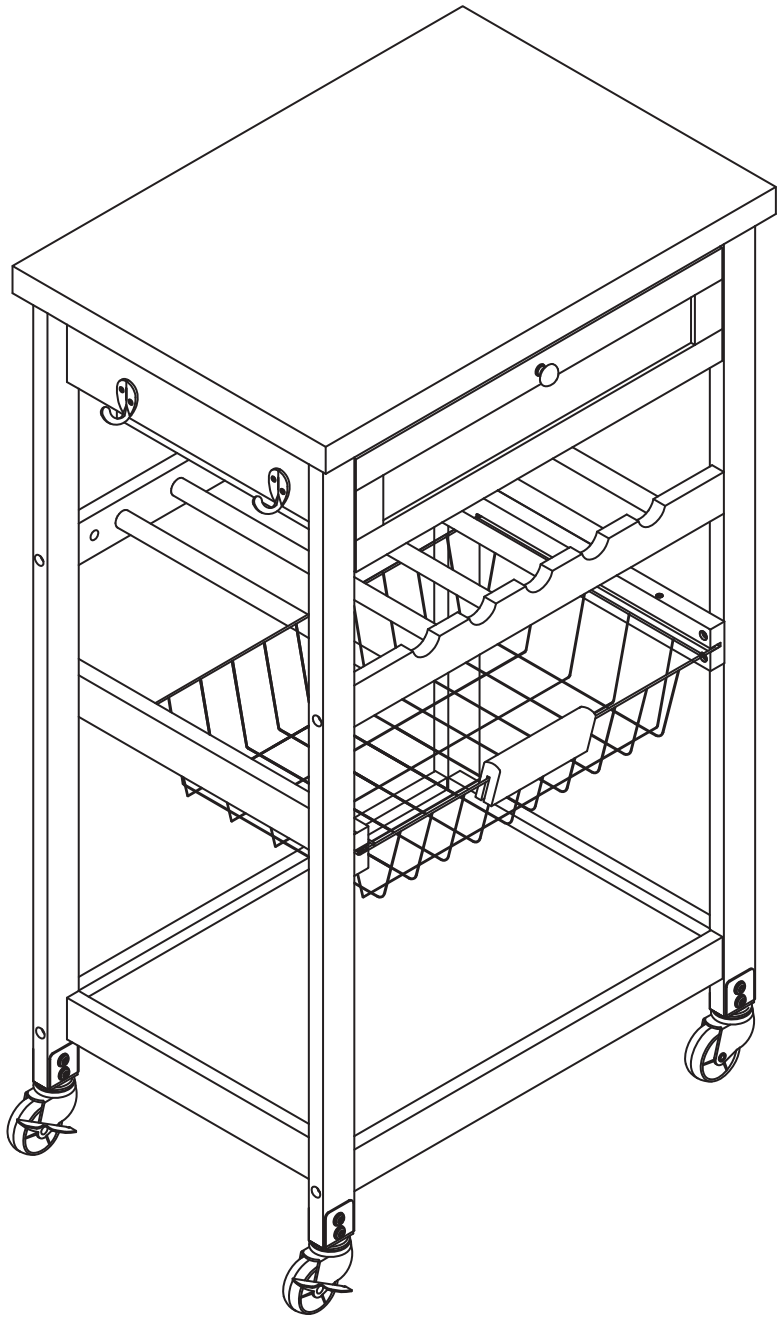

The photos and illustrations shown in this instruction manual are generic.
The manufacturer reserves the right to change any specification or feature without prior notice.

IMPORTANT: KEEP FOR FUTURE REFERENCE. READ CAREFULLY.

Assembly Instructions

K:43629718 | T:71763194 CAMILLE TROLLEY WHITE

CARE INSTRUCTIONS: WIPE CLEAN WITH A SOFT DAMP CLOTH. NEVER USE SCOURERS, ABRASIVES OR CHEMICAL SOLVENTS. KEEP AWAY FROM MOISTURE AND DIRECT SUNLIGHT. STORE IN A DRY PLACE. FOR INDOOR USE ONLY.

WARNING:DO NOT STAND, SIT OR LEAN ON THE UNIT. DO NOT USE THIS UNIT AS A STEP LADDER. ENSURE THIS UNIT IS USED ONLY ON A FLAT SURFACE. DO NOT USE THIS UNIT UNLESS ALL BOLTS AND SCREWS ARE FIRMLY SECURED. DO NOT PLACE HOT OBJECTS SUCH AS COFFEE CUPS DIRECTLY ON THE SURFACE OF THIS FURNITURE ITEM. THIS ITEM IS FOR STORAGE PURPOSES ONLY. CONTAINS SMALL PARTS. IT IS TO BE ASSEMBLED BY AN ADULT. FAILURE TO FOLLOW THESE WARNINGS COULD RESULT IN SERIOUS INJURY.

MAXIMUM SAFE LOAD:

15kg for top panel, 3kg for drawer, 5kg for wine shelf, 5kg for wire basket, 5kg for bottom shelf.

1 Hardware List

A	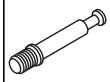	6x35mm	10pcs	B		15x10mm	10pcs	C		6x30mm	12pcs	D	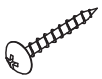	4x30mm	8pcs
E		6x70mm	8pcs	F		12x10mm	8pcs	G		M4	1pc	H			2pcs
I			2pcs	J		6x30mm	8pcs	K			8pcs	L			8pcs
M			1pc	N		4x30mm	4pcs	O		4x25mm	1pc	P			1pc
Q			2pcs	R		3x12mm	4pcs	S		3x30mm	2pcs				

福州立诚家居有限公司

2 Parts List

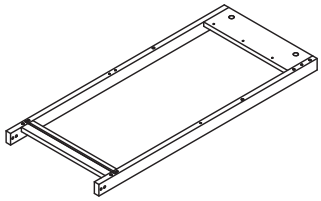	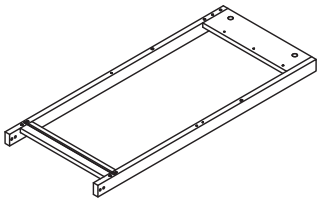	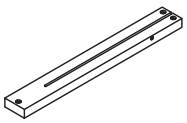	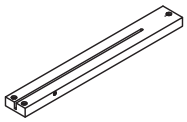
① 1pc	② 1pc	③ 1pc	④ 1pc
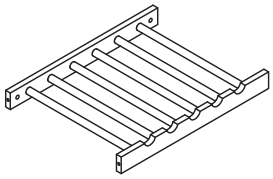	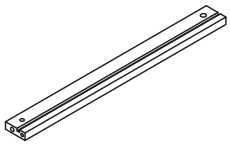	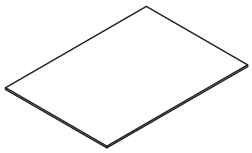	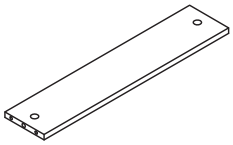
⑤ 1pc	⑥ 2pcs	⑦ 1pc	⑧ 1pc
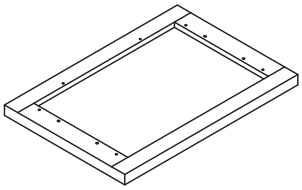	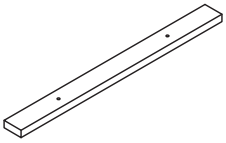	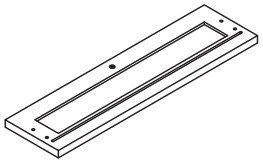	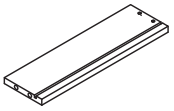
⑨ 1pc	⑩ 1pc	⑪ 1pc	⑫ 1pc
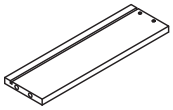	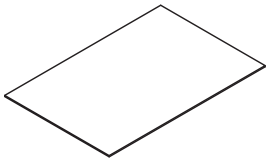	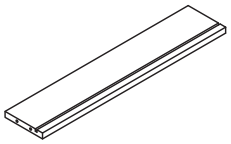	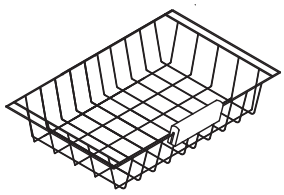
⑬ 1pc	⑭ 1pc	⑮ 1pc	⑯ 1pc

PANEL LAYOUT

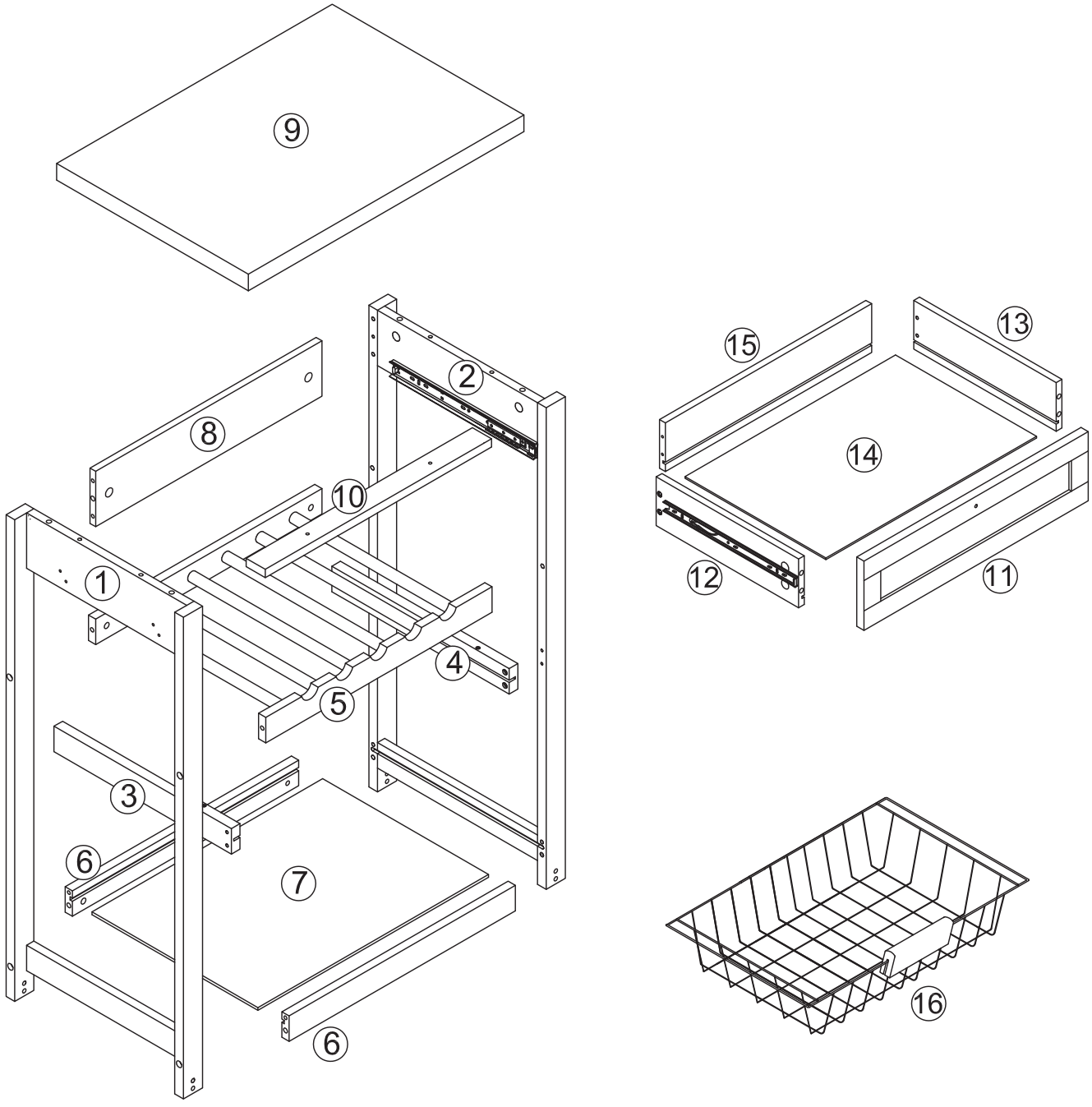

STEP1

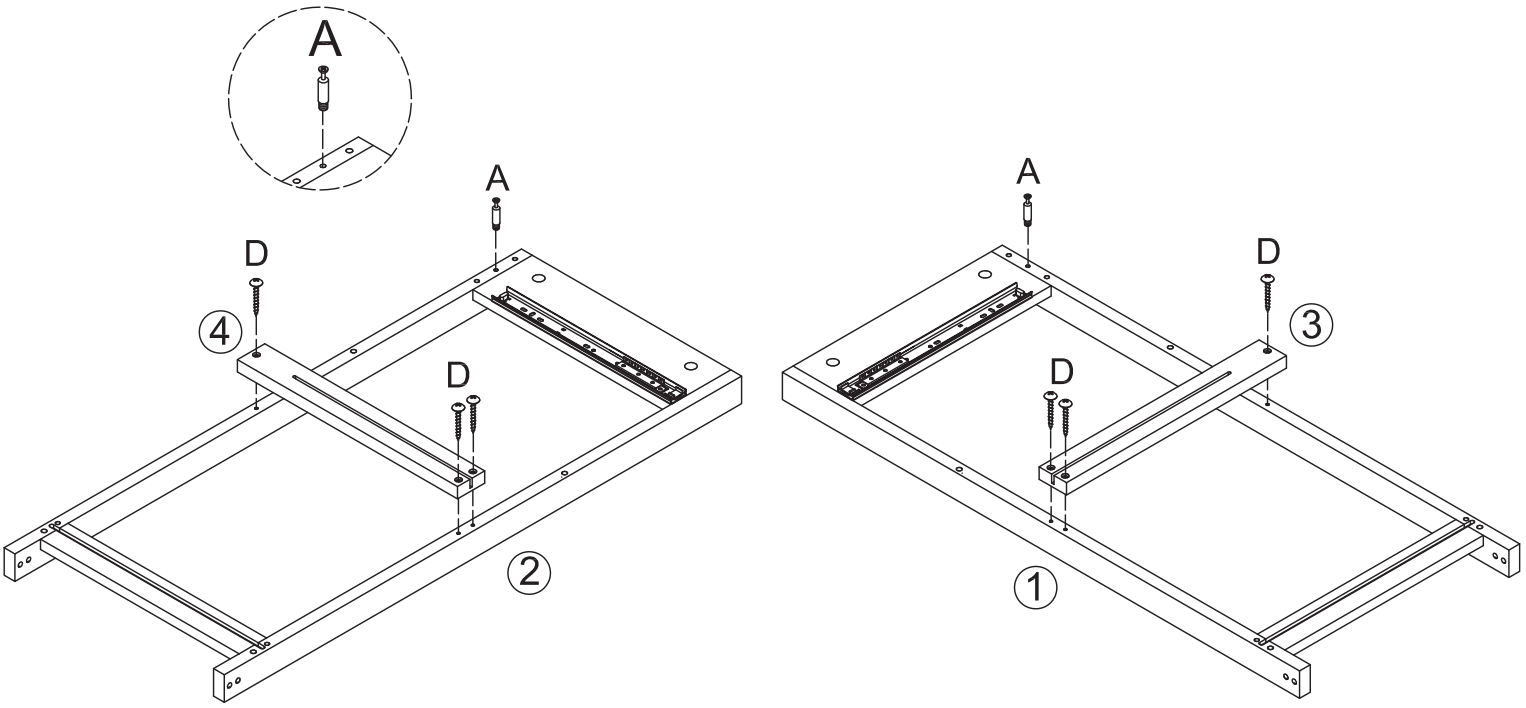

A -	× 2
D -	× 6

STEP2

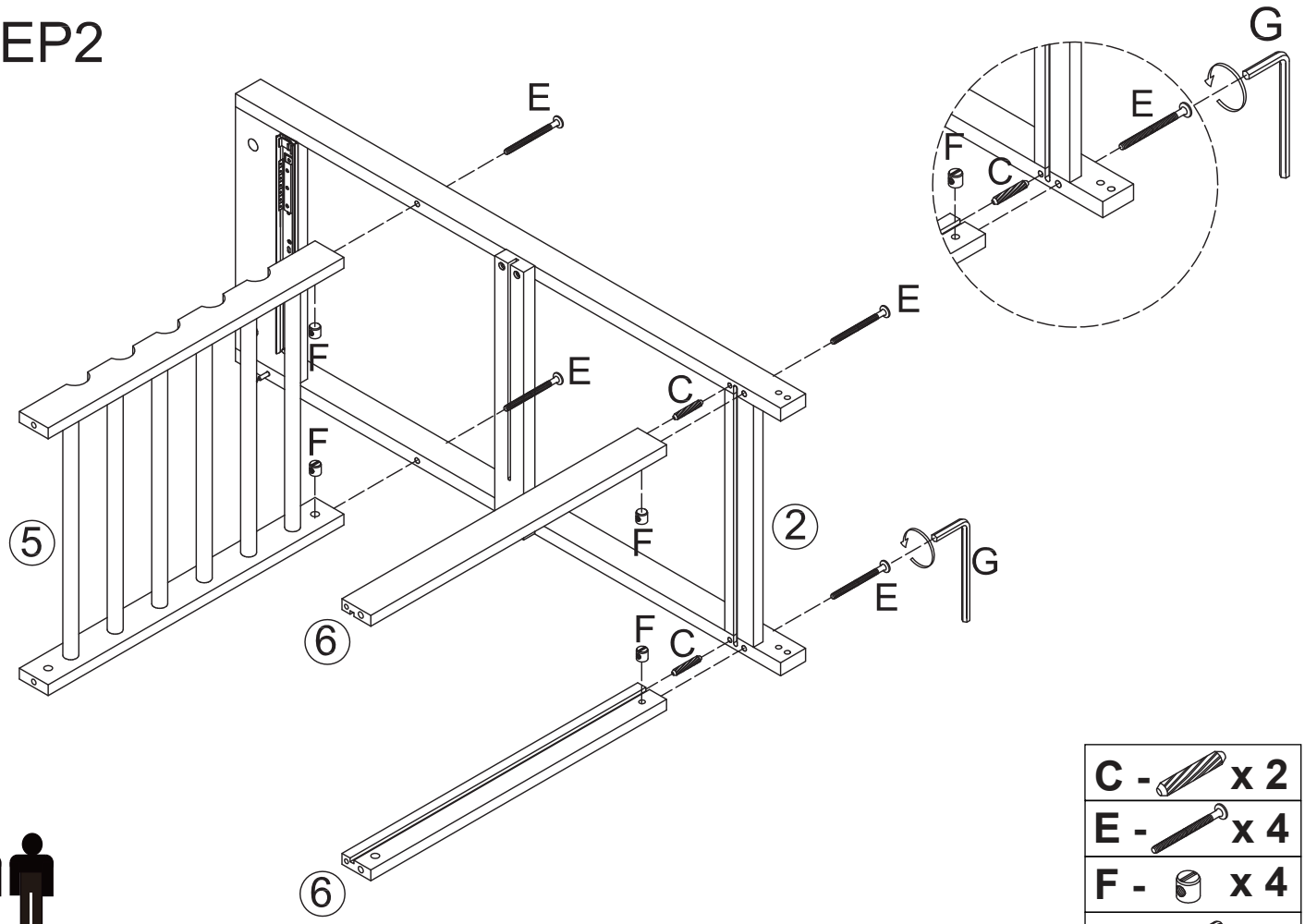

C -	x 2
E -	x 4
F -	x 4
G -	x 1

2-PERSON ASSEMBLY

STEP3

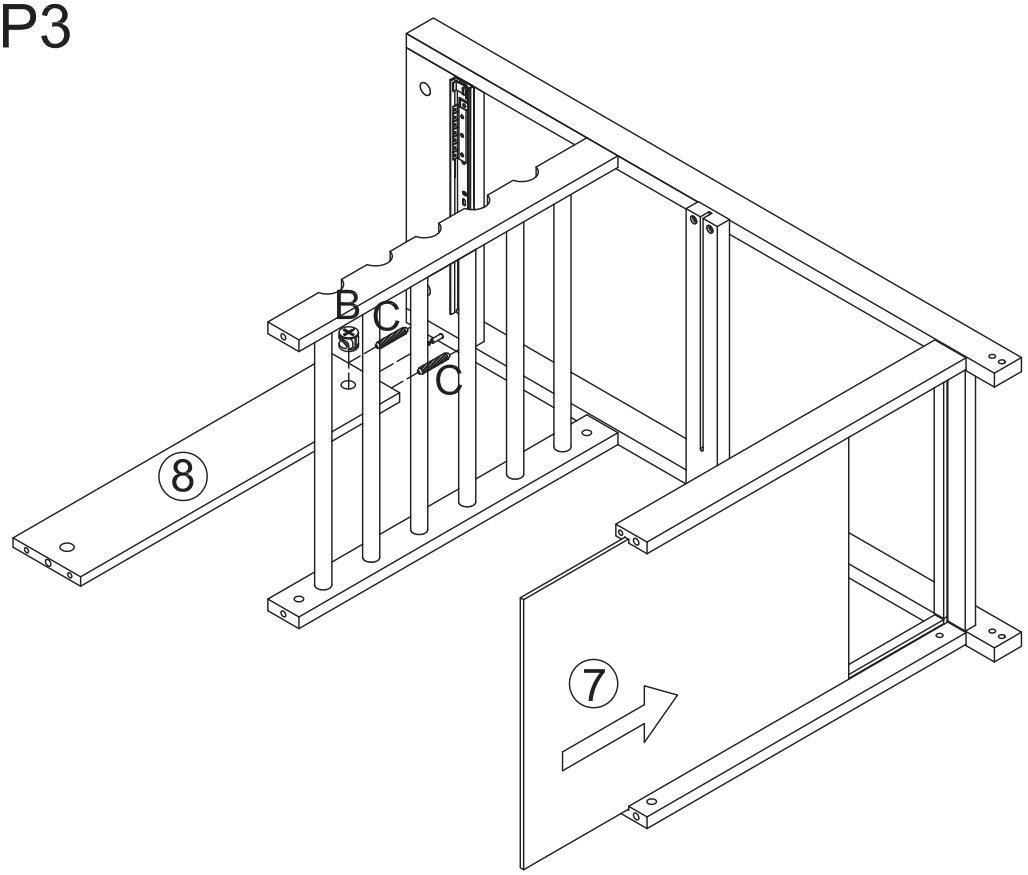

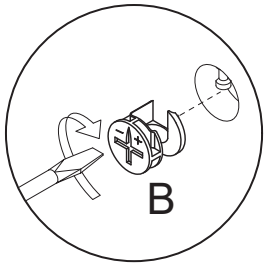

B -	x 1
C -	x 2

STEP4

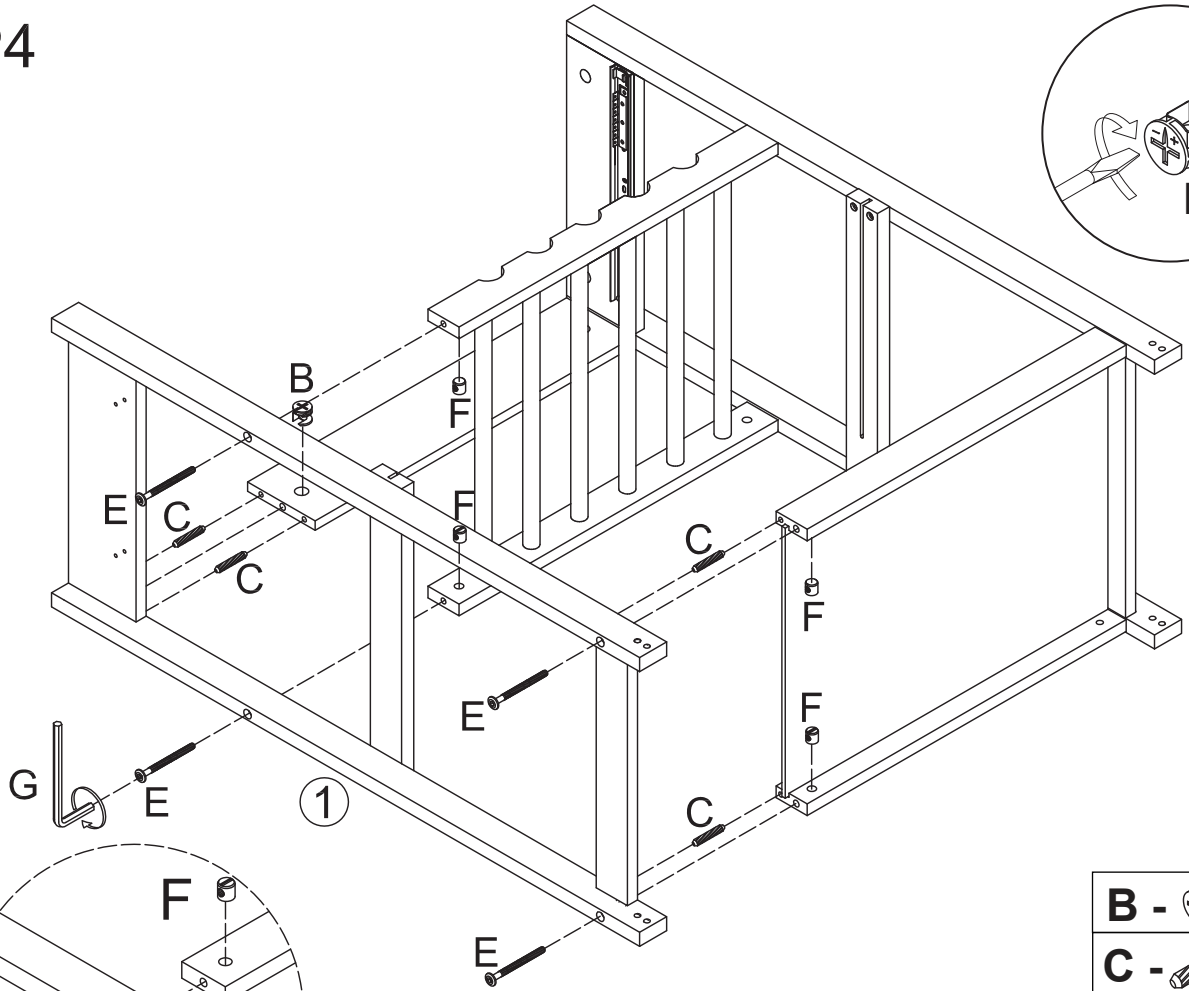

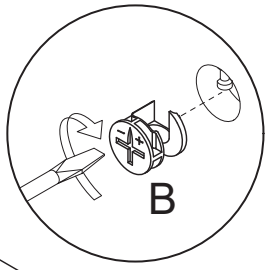

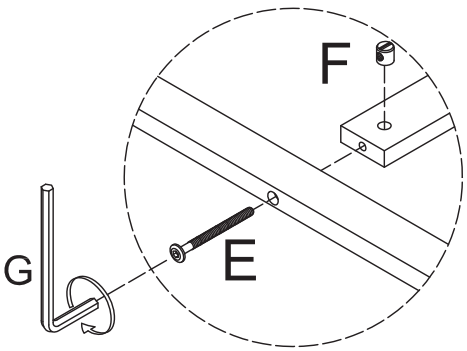

B -	x 1
C -	x 4
E -	x 4
F -	x 4
G -	x 1

STEP5

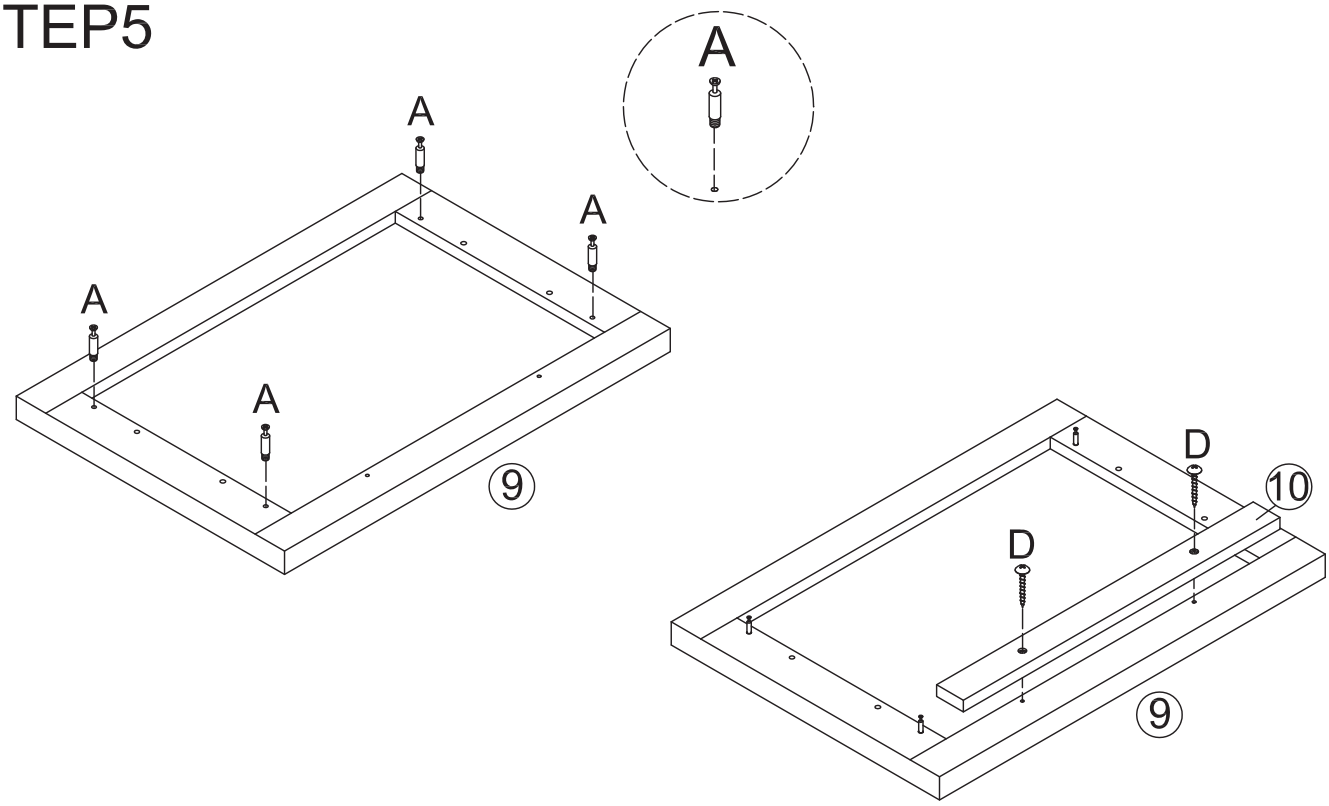

A -	× 4
D -	× 2

STEP6

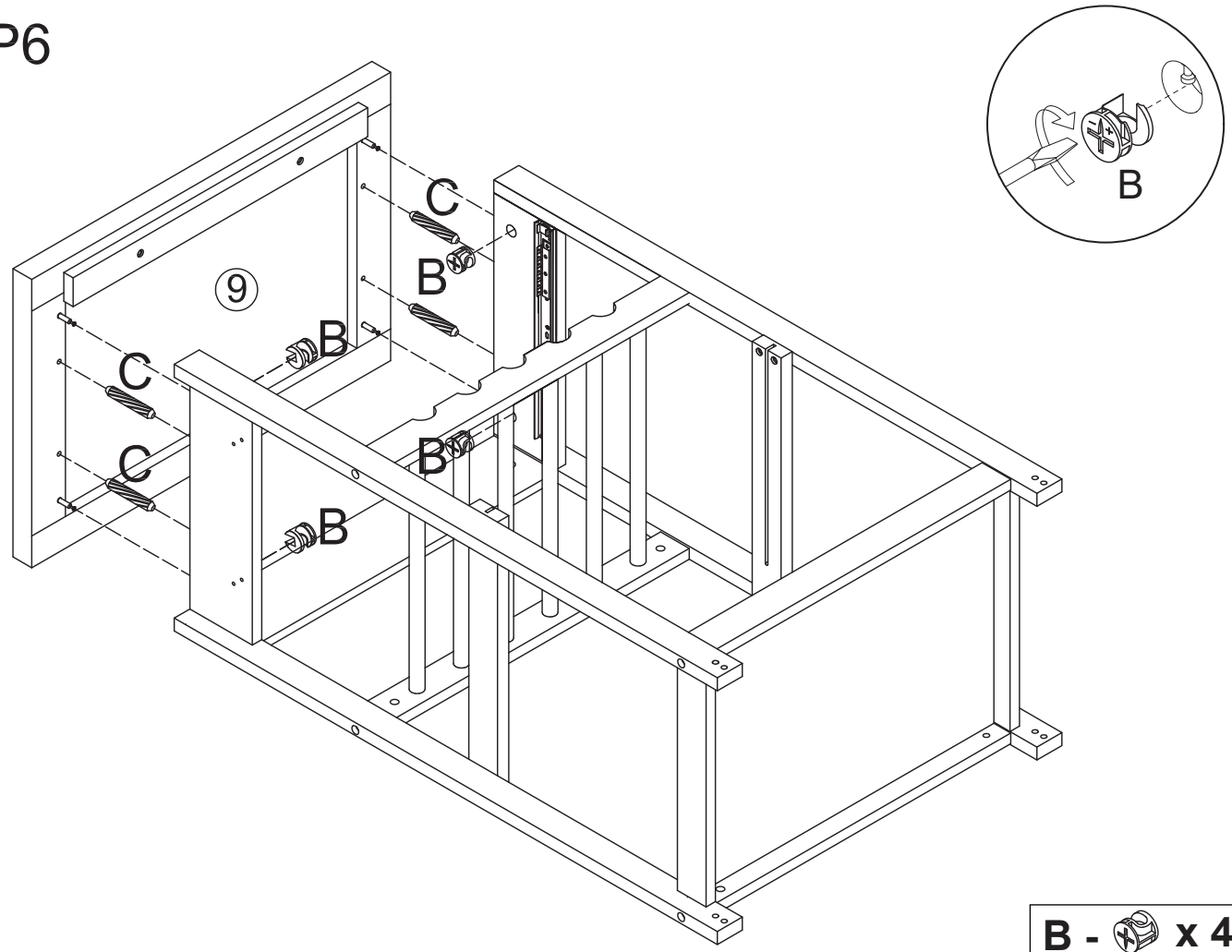

B -	x 4
C -	x 4

STEP7

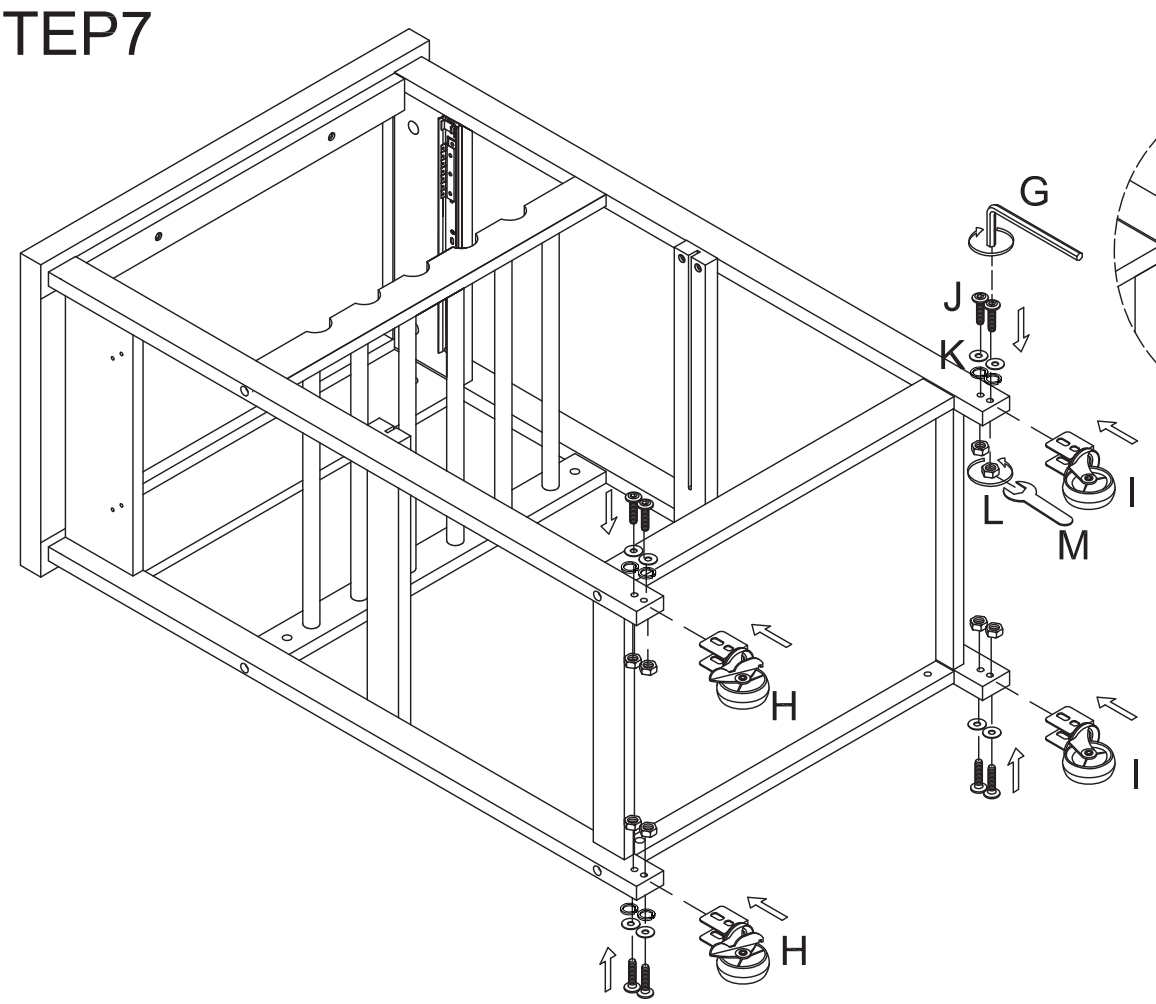

G -	x 1
H -	x 2
I -	x 2
J -	x 8
K -	x 8
L -	x 8
M -	x 1

STEP8

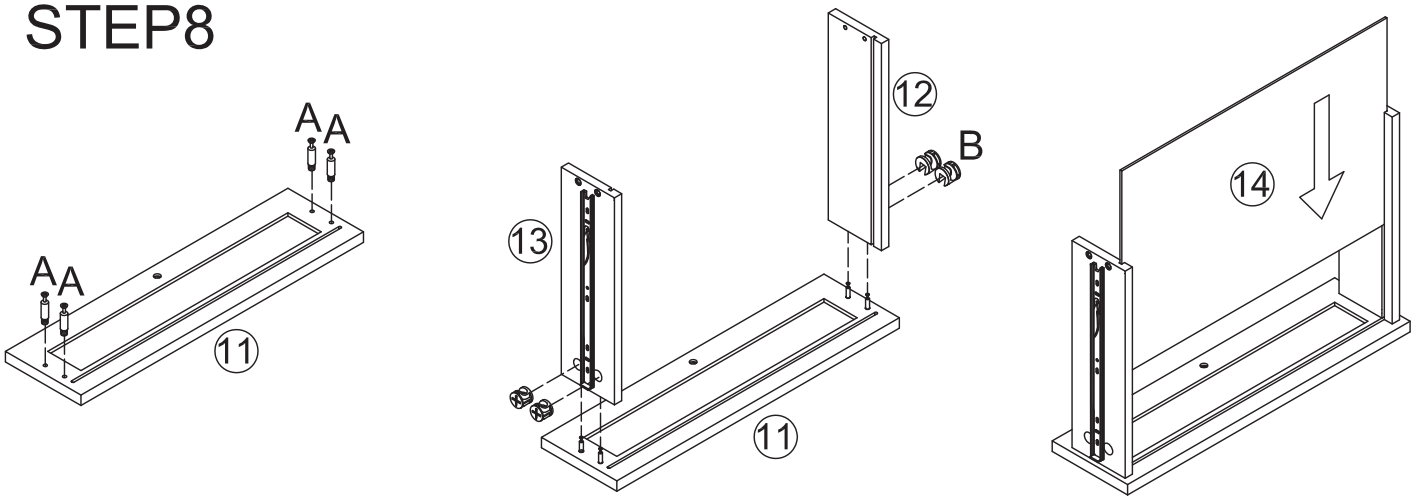

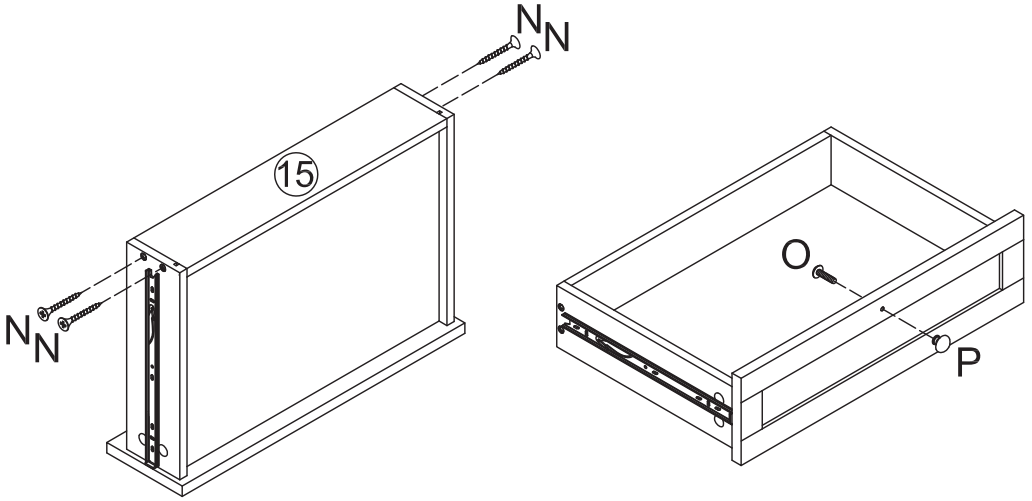

A -	x 4
B -	x 4
N -	x 4
O-	x 1
P -	x 1

STEP9

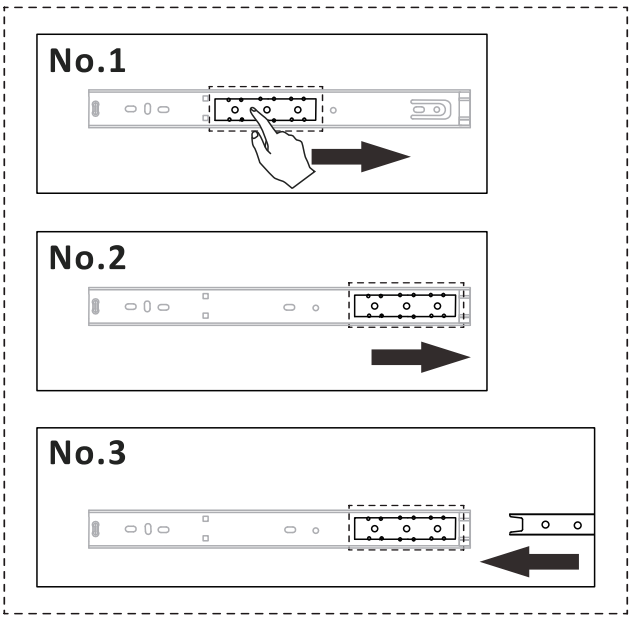

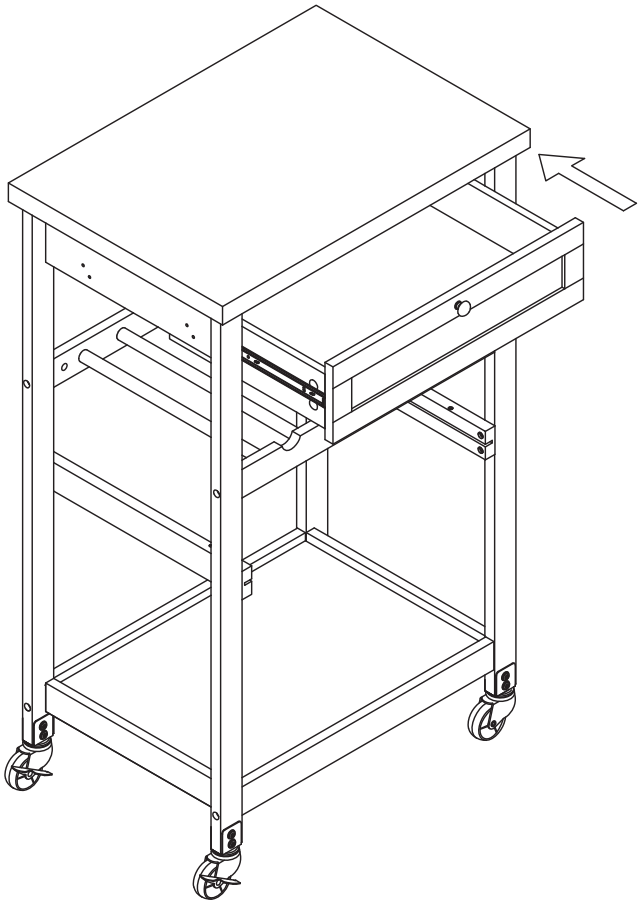

STEP10
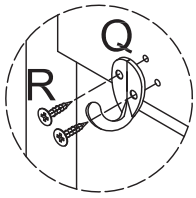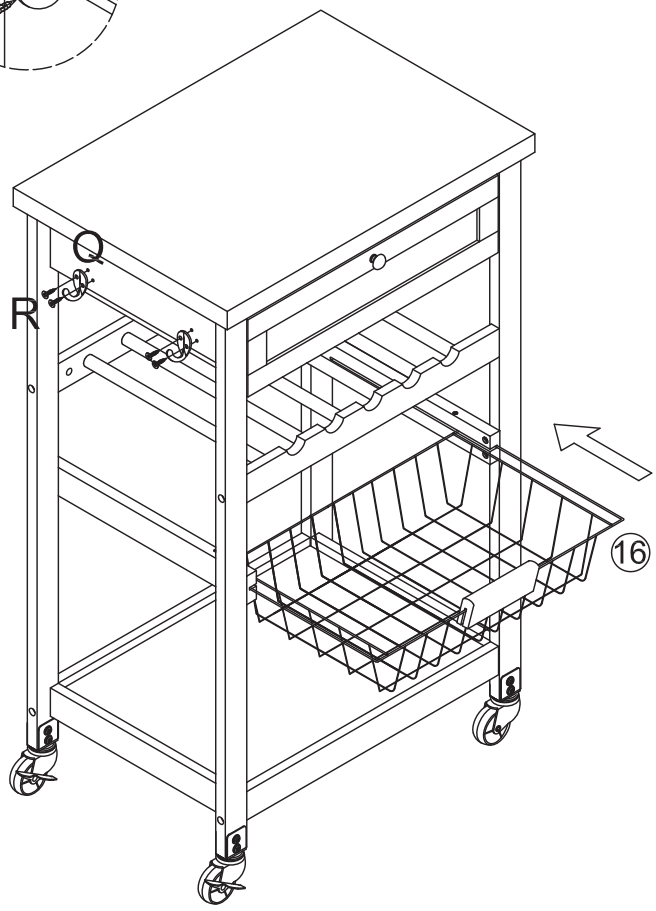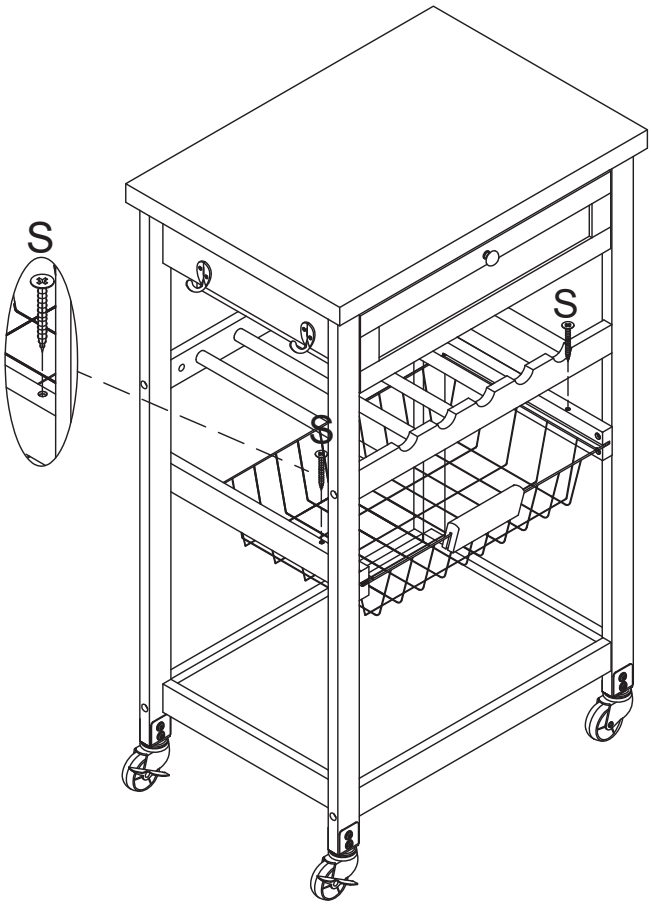
R - x 4
Q - x 2
S - x 2